MOREK

Creating a better future for You



Electrical components

morek.eu 2026

Enabling electrical connections through top-quality products and true partnerships.

Enabling electrical connections through top-quality products and true partnerships.

MOREK

Creating a better future for You

Enabling electrical connections through top-quality products and true partnerships.

- Morek **Finland**
- Morek **Estonia**
- Morek **Latvia**
- Morek **Lithuania**
- Morek **Poland**
- Morek **Czech Republic**
- Morek **Slovakia**
- Morek **France**
- Morek **Portugal**



Moreks mission "Enabling electrical connections through top-quality products and true partnerships," reflects our commitment to fostering innovation and delivering exceptional products. As we continue to expand our presence in the global electrification market, we are dedicated to ensuring reliable and advanced electrical solutions for our partners and customers.



Customer-Centric Approach

At Morek, we focus on empowering our customers by removing obstacles and providing efficient solutions, helping them succeed. Our mission is to enable connections through high-quality products and true partnerships, addressing each customer's unique needs.



Comprehensive Product Portfolio.

Morek offers a tailored portfolio to meet the needs of wholesalers, panel builders, and installers. Our complete solutions simplify processes, saving time and ensuring our B2B partners receive comprehensive support for their growth.



Innovative Solutions

We deliver innovative solutions that simplify complex problems. Our products optimize space, enhance functionality, and reduce costs, ensuring sustainable growth while offering the best price-quality-support ratio in the industry.



Technical Database and Quality Commitment

We provide a full technical database and ensure high-quality standards in every solution. Our commitment to excellence and sustainability supports long-term partnerships, offering cutting-edge solutions that meet both technical and administrative needs.

High runners



Universal terminals OTL
Page 8



Universal terminals OTL / OTL-PEN
Page 16



Universal terminals 5 pole OTL
Page 18



Main branch terminals HLAK
Page 22



Distribution blocks OJL
Page 23



Distribution blocks Moblocks
Page 27

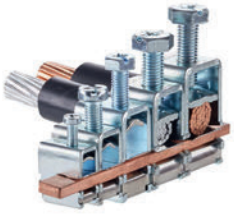

Bow terminals
Page 34



Device connectors SR
Page 37



Heavy duty connectors OL
Page 40



Universal connectors OTH
Page 43



Terminals BB
Page 47



Distribution blocks STL
Page 52



Quickbar MCB busbars
Page 55

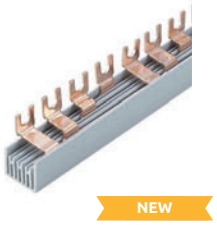

1m MCB busbars
Page 62



Insulators
Page 69



Insulated copper flexible busbar Moflex
Page 83



Sealing and edge protection profiles
Page 90



Plastic cable glands
Page 94



Metal cable glands
Page 105



Single grommets
Page 116



NEW

Conus grommets
Page 118



NEW

Single grommets T-CG
Page 120



Cable entry plates
Page 122



NEW

Cable entry plates MH-B S
Page 139



Splitting cable entry plate MC1
Page 140



Shear Bolt cable lugs
Page 144



Shear Bolt cable connectors
Page 147



Heat shrink tubes
Page 158



Heat shrink low voltage breakouts
Page 165



Heat-shrink set for cables up to 1KV
Page 169



Gel joint break
Page 171



Solar PV quick connectors
Page 177

Universal terminals OTL	**8**
1 pole (2 holes) universal terminals OTL	10
1 pole (4 holes) universal terminals OTL	12
1 pole (6 holes) universal terminals OTL	14
3 pole (6 holes) universal terminals OTL	15
Universal terminals OTL-PEN	16
5 pole (10 holes) universal terminals OTL	18
Flexible busbar universal terminals OTL	19
Protective plastic covers for universal terminals OTL, contact grease SR-1	20
Main branch terminals HLAK	22
Distribution blocks	**23**
Distribution blocks OJL 80A, 135A, 200A, 280A	24
Distribution blocks OJL 400A	25
OJL busbar adapters	26
Distribution blocks Moblock	27
Connectors OT-PEN	30
Connectors OL-PEN	31
Connectors PEN	32
Insulated universal connectors OLI	33
Device connectors, NPE and bow terminals	**33**
Bow terminals	34
Bow terminals MAE-E	35
Bimetal bow terminals MAE-H	36
Device connectors SR	37
Heavy duty connectors OL	40
Universal connectors OT	42
Universal connectors OTH	43
Terminals BB	47
Terminals MPIN and connecting adapters	49
Terminals NPE (IP00), terminals MSET	50
Terminals NPE (IP20)	51
Distribution blocks SLT	52
MCB busbars	**55**
QuickBar MCB Busbars	56
1 m MCB busbars	62
MCB Busbar Accessories	68
Accessories for switchgears	**69**
Insulators	69
Polyester spacing insulators	71
Polyamide stud insulators	72
Grounding ball studs / Adapter M 12	74
Earthing terminals and strips	75
Document holders	76
Metal spacers	77
Plastic spacers	78
Locks and keys; key, wing knob, dust cover, finger pull	79
Sliding latch and flush handle	80
Door handles, tube door handle	81
180° hinge, wind stop	82
Insulated copper flexible busbars Moflex	**83**
Moflex flexible busbar clamp	89
Sealing and edge protection profiles	**90**
Edge protection profiles	91
Sealing profiles	92
Cable glands	**94**
Plastic cable glands	95
Polyamide cable glands, standard	96
Polyamide cable glands, long thread	97
Polyamide cable glands with locknut and O-ring	99

Polyamide cable glands. Spiral type 100
Polyamide blind stops 101
Polyamide lock nuts 102
Protection tabs, O-ring for cable glands 104
Metal cable glands 105
Metal cable glands, standard, brass 106
Metal cable glands, standard, stainless steel 107
Metal cable glands, mini, brass 108
Metal cable glands, EMC, brass 109
Metal cable glands, special size, brass 110
Metal blind stop, brass 111
Metal lock nuts, brass 112
Metal lock nuts, stainless steel 113
Metal lock nuts, EMC, brass 114

Single grommets **115**

Single grommets T-VET PG (IP67) 116
Single grommets T-GET M (IP67) 117
Conus Grommets Series 118
Single grommets T-GD, T-GDM (IP54) 119
Morek T-CG C Single grommets – IP66 120
Single grommets M 20-80 121

Cable entry plates **122**

Round Cable Entry Plates (IP65) 123
Cable entry plates MC (IP66/67) 126
Cable entry plates MC (IP65) 127
Cable entry plate MC 4 (IP65) 128
Cable entry plate MC 10 (IP55) 129
Cable entry plates LMC (IP55, IP54, IP44) 130
Cable entry plate MC 16 (IP54) 131
Cable entry plates MB (IP55, 66/67) 131
Cable entry plates MHF (IP66) 132
Cable entry plates RMC (IP65) 136
Single grommets T-RGDM (IP64) 138
Cable Entry Plates – MH-B S 139
Splitting cable entry plates 140
Splitting cable entry plates SCG (IP55) 141
Splitting cable entry plates MC (IP66) 142

Cable Accessories **143**

Shear Bolt cable lugs up to 12 kV 144
Shear Bolt cable connectors up to 12 kV 147
Shear Bolt cable lugs up to 36kV 150
Shear Bolt cable connectors up to 36kV 154
Clamp device for screw connectors 157
Thinwall Heat-shrink Tubing 159
Mediumwall Heat-shrink Tubing 161
Heavywall Heat-shrink Tubing 163
Heat-shrink Low Voltage Breakouts 165
Heat-shrink End Caps 166
Heat-shrink sets for cables up to 1kV 169

Gel joints Break **171**

Modular terminal blocks 173
InsuGel One, 300 ml; InsuGel One, 1 kg 175

Solar PV Connectors **177**

Solar PV Quick Connectors 178
Solar PV Crimping Connectors 179

Table for IP codes **180**

End-to-End Electric Vehicle Charging Solutions **181**

Universal terminals OTL

According to IEC
1000V AC
1500V DC

According to UL
1000V AC/DC

Bimetal
For copper and aluminium conductors

Class A



Universal terminals OTL are designed for copper and aluminium conductors. The terminals are suitable for all types of copper or aluminium conductors with cross-section up to 300 mm². Multiple copper wires can be placed to the universal terminals OTL blocks according to the respective terminal type (see Table of universal terminals OTL wiring connectivity on page 21). IP protection class for OTL terminals is IP20.

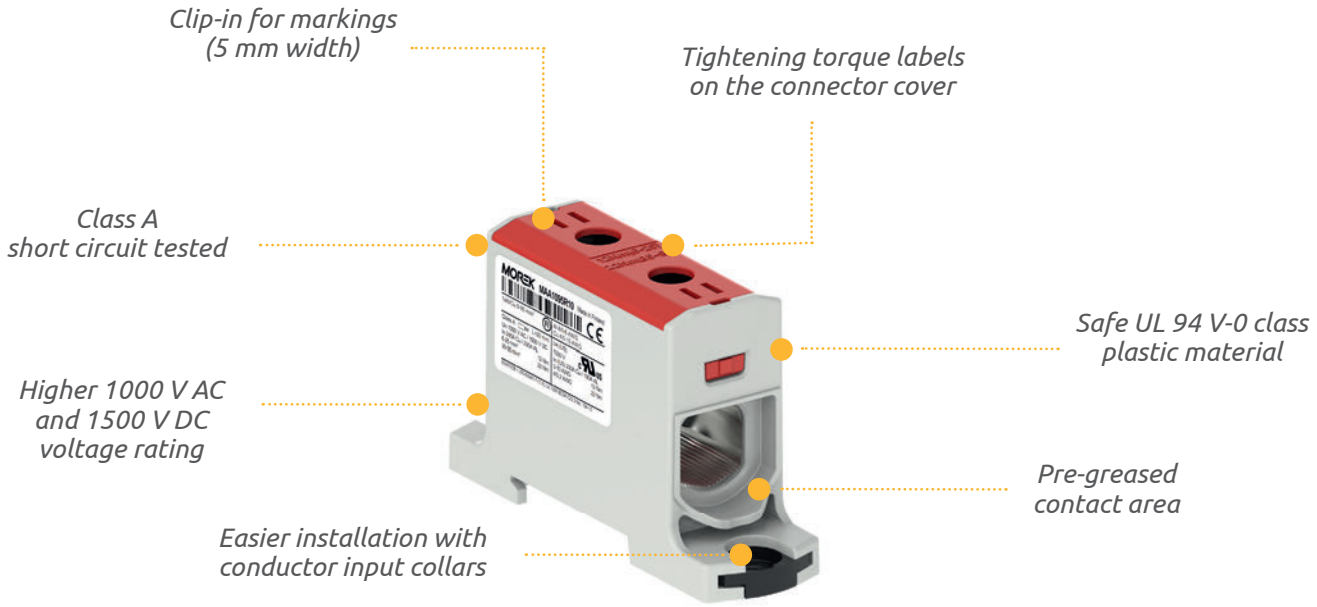

Certification and product safety

Universal terminals OTL undergo rigorous testing and certification to ensure compliance with industry standards. They are certified according to EN 60947-7-1:2009 and EN 61238-1:2003, which establish requirements for terminal blocks and connectors for power cables.

EN 61238-1:2003 classifies connectors into two categories

Class A, which undergo heat cycle and short-circuit testing for electricity distribution and industrial networks.

Class B, which only undergo heat cycle testing and are suitable for networks with rapid overload or short-circuit protection.

Universal terminals OTL are certified as Class A connectors, making them suitable for most applications. When choosing a connector, it is essential to ensure it bears the CE marking and Class A certification symbol, such as the FI mark, for reliable and safe electrical connections.

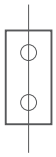







	OTL 16	OTL 35	OTL 50
Grey	MAA1016A10	MAA1035A10	MAA1050A10
Blue	MAA1016B10	MAA1035B10	MAA1050B10
Yellow-green	MAA1016Y10	MAA1035Y10	MAA1050Y10
Red	MAA1016R10	MAA1035R10	MAA1050R10
Black	MAA1016S10	MAA1035S10	MAA1050S10
Technical data			
Conductor cross-section Cu, Al (mm^2)	1,5 - 16	2,5 - 35	1,5 - 50
Nominal voltage AC / DC (V) IEC	1000 / 1500	1000 / 1500	1000 / 1500
Nominal voltage AC / DC (V) UL	1000	1000	1000
Nominal current (A) IEC	82 (Cu) / 75 (Al)	135 (Cu) / 120 (Al)	160 (Cu) / 145 (Al)
Nominal current (A) UL	85 (Cu) / 65 (Al)	115 (Cu) / 90 (Al)	150 (Cu) / 120 (Al)
Short time withstand current (Icw)	1,92 kA/1s	4,20 kA/1s	6,00 kA/1s
Width / Height / Length (mm)	13,5 / 39,5 / 46,8	16 / 40 / 47	18 / 43 / 51,6
Screw, hexagonal key	No. 4	No. 4	No. 5
Tightening torque (Nm)	1,5 Nm (1,5 mm^2) 3,5 Nm (2,5 - 6 mm^2) 7 Nm (10-16 mm^2)	3 Nm (2,5 - 16 mm^2) 6 Nm (25 - 35 mm^2) -	1,5 Nm (1,5 - 2,5 mm^2) 5 Nm (4 - 10 mm^2) 10 Nm (16 - 50 mm^2)
Mounting	DIN rail	DIN rail	DIN rail
Weight (g)	17	27	30
Package (pcs)	66	54	48

Dimensions

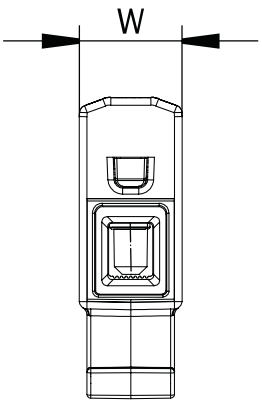

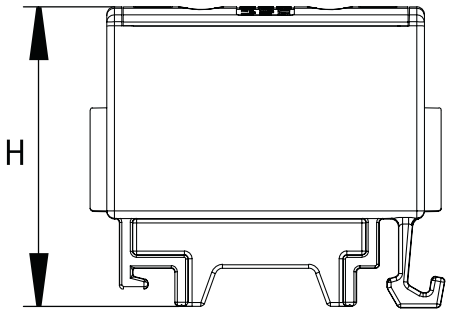

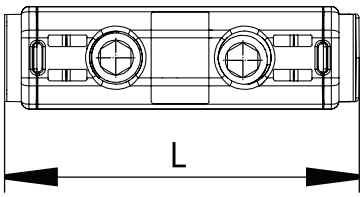

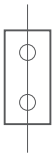









		OTL 95	OTL 150	OTL 240	OTL 300
Grey		MAA1095A10	MAA1150A10	MAA1240A10	MAA1300A10
Blue		MAA1095B10	MAA1150B10	MAA1240B10	MAA1300B10
Yellow-green		MAA1095Y10	MAA1150Y10	MAA1240Y10	MAA1300Y10
Red		MAA1095R10	MAA1150R10	MAA1240R10	MAA1300R10
Black		MAA1095S10	MAA1150S10	MAA1240S10	MAA1300S10
Technical data					
Conductor cross-section Cu, Al (mm^2)		6 - 95	25 - 150	35 - 240	95 - 300
Nominal voltage AC / DC (V)	IEC	1000 / 1500	1000 / 1500	1000 / 1500	1000 / 1500
Nominal voltage AC / DC (V)	UL	1000	1000	1000	-
Nominal current (A)	IEC	245 (Cu) / 220 (Al)	320 (Cu) / 290 (Al)	425 (Cu) / 380 (Al)	490 (Cu) / 440 (Al)
Nominal current (A)	UL	230 (Cu) / 180 (Al)	285 (Cu) / 250 (Al)	380 (Cu) / 310 (Al)	-
Short time withstand current (Icw)		11,40 kA/1s	18,00 kA/1s	28,80 kA/1s	36,00 kA/1s
Width / Height / Length (mm)		25 / 51 / 84	31 / 54 / 84	37 / 65 / 106	44,5 / 71 / 122
Screw, hexagonal key		No. 6	No. 6	No. 8	No. 8
Tightening torque (Nm)		12 Nm (6 - 25 mm^2) 22 Nm (35 - 95 mm^2) -	14 Nm (25 - 50 mm^2) 35 Nm (70 - 150 mm^2)	26 Nm (35 - 120 mm^2) 46 Nm (150 - 240 mm^2)	30 Nm (95 - 150 mm^2) 60 Nm (185 - 300 mm^2)
Mounting		DIN rail, screw	DIN rail, screw	DIN rail, screw	DIN rail, screw
Weight (g)		65	100	195	332
Package (pcs)		24	24	24	3

Dimensions

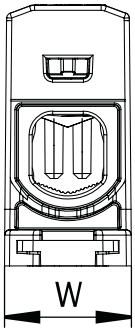

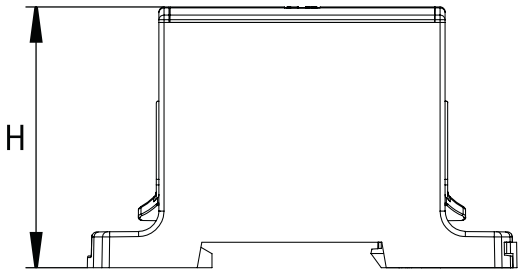

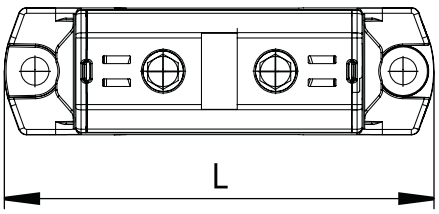

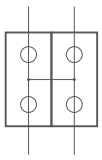







		OTL 35-2	OTL 50-2	OTL 95-2
Grey		MAA2035A10	MAA2050A10	MAA2095A10
Blue		MAA2035B10	MAA2050B10	MAA2095B10
Yellow-green		MAA2035Y10	MAA2050Y10	MAA2095Y10
Red		MAA2035R10	MAA2050R10	MAA2095R10
Black		MAA2035S10	MAA2050S10	MAA2095S10
Technical data				
Conductor cross-section Cu, Al (mm²)		2,5 - 35	1,5 - 50	6 - 95
Nominal voltage AC / DC (V)	IEC	1000 / 1500	1000 / 1500	1000 / 1500
Nominal voltage AC / DC (V)	UL	1000	1000	1000
Nominal current (A)	IEC	270 (Cu) / 120 (Al)	320 (Cu) / 290 (Al)	490 (Cu) / 220 (Al)
Nominal current (A)	UL	115 (Cu) / 90 (Al)	150 (Cu) / 120 (Al)	230 (Cu) / 180 (Al)
Short time withstand current (Icw)		4,20 kA/1s	6,00 kA/1s	11,40 kA/1s
Width / Height / Length (mm)		27 / 40 / 47	30 / 43 / 51,6	42 / 51 / 84
Screw, hexagonal key		No. 4	No. 5	No. 6
Tightening torque (Nm)		3 Nm (2,5 - 16 mm²) 6 Nm (25 - 35 mm²) -	1,5 Nm (1,5 - 2,5 mm²) 5 Nm (4 - 10 mm²) 10 Nm (16 - 50 mm²)	12 Nm (6 - 25 mm²) 22 Nm (35 - 95 mm²) -
Mounting		DIN rail	DIN rail	DIN rail, screw
Weight (g)		44	90	125
Package (pcs)		30	54	24

Dimensions

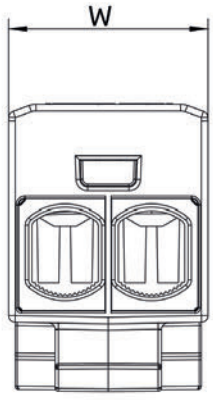

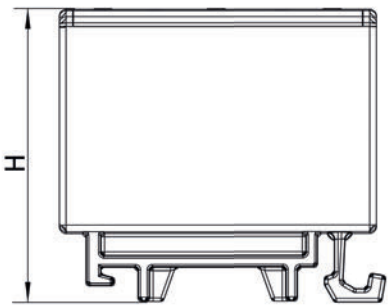

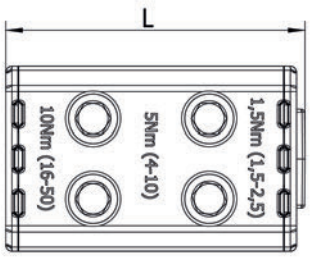

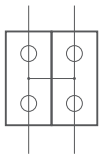







		OTL 150-2	OTL 240-2	OTL 300-2
Grey		MAA2150A10	MAA2240A10	MAA2300A10
Blue		MAA2150B10	MAA2240B10	MAA2300B10
Yellow-green		MAA2150Y10	MAA2240Y10	MAA2300Y10
Red		MAA2150R10	MAA2240R10	MAA2300R10
Black		MAA2150S10	MAA2240S10	MAA2300S10
Technical data				
Conductor cross-section Cu, Al (mm^2)		25 - 150	35 - 240	95 - 300
Nominal voltage AC / DC (V)	IEC	1000 / 1500	1000 / 1500	1000 / 1500
Nominal voltage AC / DC (V)	UL	1000	1000	-
Nominal current (A)	IEC	640 (Cu) / 290 (Al)	850 (Cu) / 380 (Al)	980 (Cu) / 630 (Al)
Nominal current (A)	UL	285 (Cu) / 250 (Al)	380 (Cu) / 310 (Al)	-
Short time withstand current (Icw)		18,00 kA/1s	28,80 kA/1s	36,00 kA/1s
Width / Height / Length (mm)		51 / 54 / 84	60 / 65 / 106	70 / 77 / 122
Screw, hexagonal key		No. 6	No. 8	No. 8
Tightening torque (Nm)		14 Nm (25 - 50 mm^2) 30 Nm (70 - 150 mm^2) -	26 Nm (35 - 120 mm^2) 40 Nm (150 - 240 mm^2) -	30 Nm (95 - 150 mm^2) 60 Nm (185 - 300 mm^2) -
Mounting		DIN rail, screw	DIN rail, screw	DIN rail, screw
Weight (g)		170	340	632
Package (pcs)		24	12	3

Dimensions

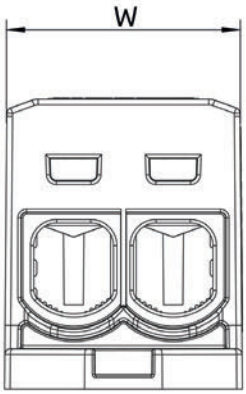

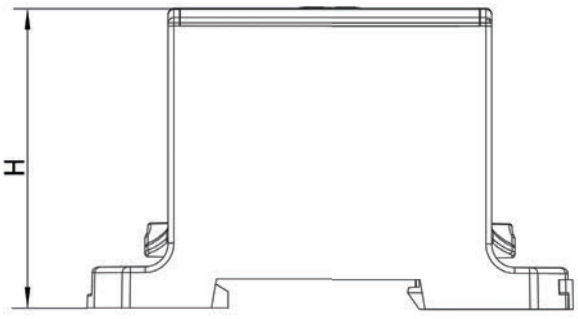

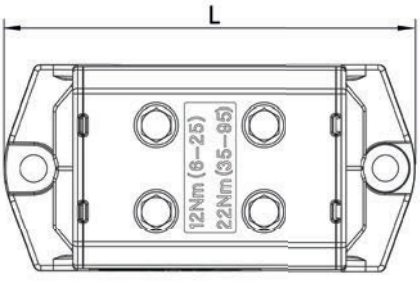

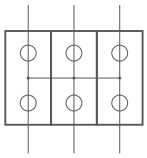



OTL 50-3



OTL 95-3



OTL 150-3



OTL 300-3

Grey	MAA3050A10	MAA3095A10	MAA3150A10	MAA3300A10
Blue	MAA3050B10	MAA3095B10	MAA3150B10	MAA3300B10
Yellow-green	MAA3050Y10	MAA3095Y10	MAA3150Y10	MAA3300Y10
Red	MAA3050R10	MAA3095R10	MAA3150R10	MAA3300R10
Black	MAA3050S10	MAA3095S10	MAA3150S10	MAA3300S10

Technical data

Conductor cross-section Cu, Al (mm²)	1.5 - 50	6 - 95	25 - 150	95 - 300
Nominal voltage AC / DC (V) IEC	1000 / 1500	1000 / 1500	1000 / 1500	1000 / 1500
Nominal voltage AC / DC (V) UL	1000	1000	1000	-
Nominal current (A) IEC	320 (Cu) / 290 (Al)	490 (Cu) / 440 (Al)	640 (Cu) / 500 (Al)	850 (Cu) / 630 (Al)
Nominal current (A) UL	150 (Cu) / 120 (Al)	230 (Cu) / 180 (Al)	285 (Cu) / 250 (Al)	-
Short time withstand current (Icw)	6,00 kA/1s	11,40 kA/1s	18,00 kA/1s	36,00 kA/1s
Width / Height / Length (mm)	44,6 / 40,8 / 79,5	59 / 51 / 84	71,3 / 54 / 84	101 / 78 / 120
Screw, hexagonal key	No. 5	No. 6	No. 6	No. 8
Tightening torque (Nm)	1,5 Nm (1,5 - 2,5 mm²) 5 Nm (4 - 10 mm²) 10 Nm (16 - 50 mm²)	12 Nm (6 - 25 mm²) 22 Nm (35 - 95 mm²) -	14 Nm (25 - 50 mm²) 30 Nm (70 - 150 mm²) -	35 Nm (95 - 150 mm²) 45 Nm (180 - 300 mm²) -
Mounting	DIN rail, screw	DIN rail, screw	DIN rail, screw	DIN rail, screw
Weight (g)	109	178	246	730
Package (pcs)	24	12	12	1

** Currents achievable by connecting multiple input cables.*

Dimensions

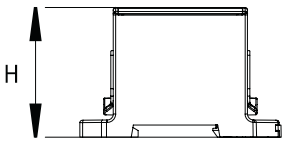

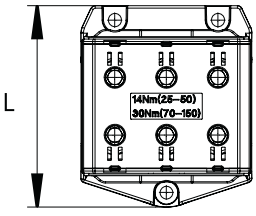

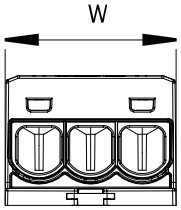

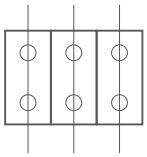





	OTL 35-3X	OTL 50-3X
Grey	MAA1335A10	MAA1350A10

Technical data		
Conductor cross-section Cu, Al (mm^2)	2,5 - 35	1,5 - 50
Nominal voltage AC / DC (V) IEC	1000 / 1500	1000 / 1500
Nominal voltage AC / DC (V) UL	1000	1000
Nominal current (A) IEC	3 x 135 (Cu) / 3 x 120 (Al)	3 x 160 (Cu) / 3 x 145 (Al)
Nominal current (A) UL	3 x 115 (Cu) / 3 x 90 (Al)	3 x 150 (Cu) / 3 x 120 (Al)
Short time withstand current (Icw)	4,20 kA/1s	6,00 kA/1s
Width / Height / Length (mm)	46 / 40 / 49	49 / 43 / 54,6
Screw, hexagonal key	No. 4	No. 5
Tightening torque (Nm)	3 Nm (2,5 - 16 mm^2) 6 Nm (25 - 35 mm^2)	1,5 Nm (1,5 - 2,5 mm^2) 5 Nm (4 - 10 mm^2) 10 Nm (16 - 50 mm^2)
Mounting	DIN rail	DIN rail
Weight (g)	70	81
Package (pcs)	18	30

Dimensions

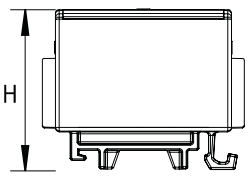

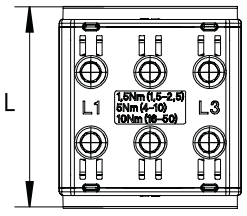

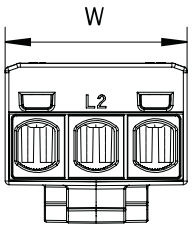

The OTL-PEN universal series terminals are designed to create a point for dividing TN-C systems into TN-S.

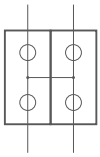













	OTL-PEN 35-2	OTL-PEN 50-2	OTL-PEN 95-2	OTL-PEN 150-2	OTL-PEN 240-2	OTL-PEN 300-2
Yellow-green-blue	MAA2035P10	MAA2050P10	MAA2095P10	MAA2150P10	MAA2240P10	MAA2300P10
Technical data						
Conductor cross-section Cu, Al (mm²)	2,5-35	1,5 - 50	6 - 95	25 - 150	35 - 240	95 - 300
Nominal voltage AC / DC (V)	1000 / 1500	1000 / 1500	1000 / 1500	1000 / 1500	1000 / 1500	1000 / 1500
Nominal current (A)	270 (Cu) / 120 (Al)	320 (Cu) / 290 (Al)	490 (Cu) / 220 (Al)	640 (Cu) / 290 (Al)	850 (Cu) / 380 (Al)	850 (Cu) / 630 (Al)
Width / Height / Length (mm)	27 / 40 / 47	30 / 43 / 51,6	42 / 51 / 84	51 / 54 / 84	60 / 65 / 106	70 / 77 / 122
Screw, hexagonal key	No. 4	No. 5	No. 6	No. 6	No. 8	No. 8
Tightening torque (Nm)	3 Nm (2,5 - 16 mm²) 6 Nm (25 - 35 mm²) -	1,5 Nm (1,5 - 2,5 mm²) 5 Nm (4 - 10 mm²) 10 Nm (16 - 50 mm²)	12 Nm (6 - 25 mm²) 22 Nm (35 - 95 mm²) -	14 Nm (25 - 50 mm²) 30 Nm (70 - 150 mm²) -	26 Nm (35 - 120 mm²) 40 Nm (150 - 240 mm²) -	35 Nm (95 - 150 mm²) 45 Nm (180 - 300 mm²) -
Mounting	DIN rail	DIN rail	DIN rail, screw	DIN rail, screw	DIN rail, screw	DIN rail, screw
Weight (g)	44	90	125	170	340	623
Package (pcs)	30	54	24	24	12	1

Dimensions

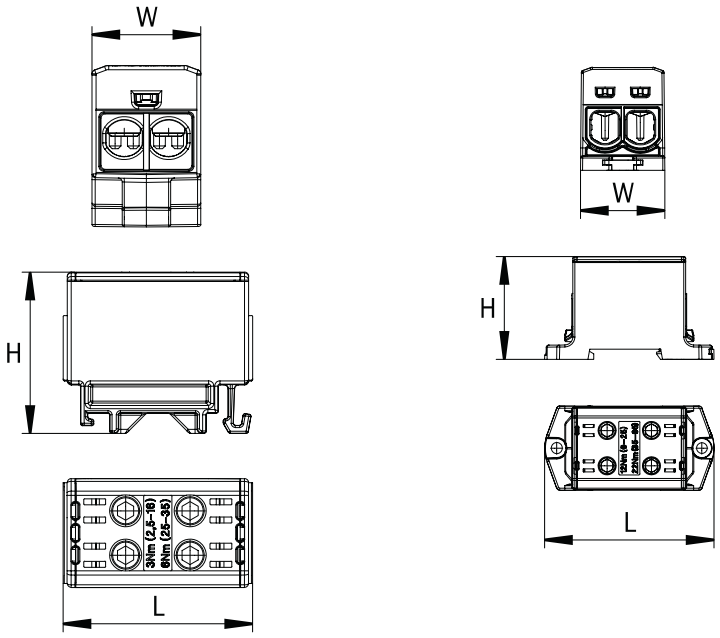

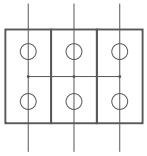



OTL-PEN 50-3



OTL-PEN 95-3



OTL-PEN 150-3

Yellow-green-blue	MAA3050P10	MAA3095P10	MAA3150P10

Technical data

Conductor cross-section Cu, Al (mm²)	1.5 - 50	6 - 95	25 - 150
Nominal voltage AC / DC (V)	1000 / 1500	1000 / 1500	1000 / 1500
Nominal current (A)	320 (Cu) / 290 (Al)	490 (Cu) / 440 (Al)	640 (Cu) / 500 (Al)
Width / Height / Length (mm)	44,6 / 40,8 / 79,5	59 / 51 / 84	71,3 / 54 / 84
Screw, hexagonal key	No. 5	No. 6	No. 6
Tightening torque (Nm)	1,5 Nm (1,5 - 2,5 mm²) 5 Nm (4 - 10 mm²) 10 Nm (16 - 50 mm²)	12 Nm (6 - 25 mm²) 22 Nm (35 - 95 mm²) -	14 Nm (25 - 50 mm²) 30 Nm (70 - 150 mm²) -
Mounting	DIN rail, screw	DIN rail, screw	DIN rail, screw
Weight (g)	109	178	246
Package (pcs)	24	12	12

Dimensions

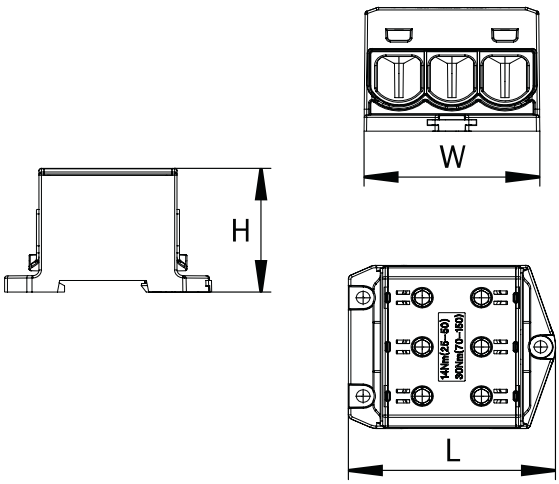

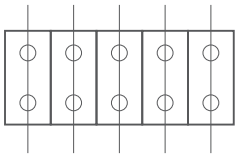



	OTL 16-5x	OTL 35-5X	OTL 50-5x	OTL 95-5x
Grey, Blue, Yellow-green	MAA5016A11	MAA5035A10	MAA5050A10	MAA5095A10

Technical data

Conductor cross-section Cu, Al (mm²)	1,5 - 16	2,5 - 35	1,5 - 50	6 - 95
Nominal voltage AC / DC (V) IEC	1000 / 1500	1000 / 1500	1000 / 1500	1000 / 1500
Nominal voltage AC / DC (V) UL	-	1000	-	-
Nominal current (A) IEC	5 x 82 (Cu) / 5 x 75 (Al)	5 x 135 (Cu) / 5 x 120 (Al)	5 x 160 (Cu) / 5 x 145 (Al)	5 x 245 (Cu) / 5 x 220 (Al)
Nominal current (A) UL	-	5 x 115 (Cu) / 5 x 90 (Al)	-	-
Short time withstand current (Icw)	1,92 kA/1s	4,20 kA/1s	6,00 kA/1s	11,40 kA/1s
Width / Height / Length (mm)	61 / 32 / 65	78,5 / 40 / 65	86,1 / 43 / 67,7	117,4 / 50,5 / 82,5
Screw, hexagonal key	No. 4	No. 4	No. 5	No. 6
Tightening torque (Nm)	1,5 Nm (1,5 mm²) 3,5 Nm (2,5 - 6 mm²) 7 Nm (10 - 16 mm²)	3 Nm (2,5 - 16 mm²) 6 Nm (25 - 35 mm²) -	1,5 Nm (1,5 - 2,5 mm²) 5 Nm (4 - 10 mm²) 10 Nm (16 - 50 mm²)	12 Nm (6 - 25 mm²) 22 Nm (35 - 95 mm²) -
Mounting	DIN rail, screw	DIN rail, screw	DIN rail, screw	DIN rail, screw
Weight (g)	72	120	196	323
Package (pcs)	10	16	8	10

Dimensions

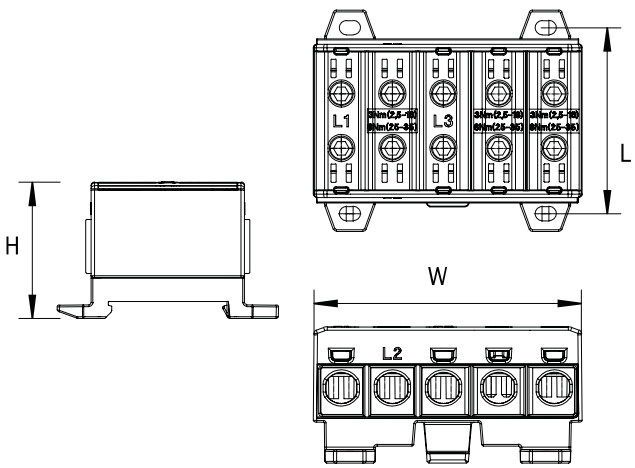

OTL terminals for flexible busbars *provide a reliable, high-performance solution for connecting copper (bare or tinned) flexible busbars to copper or aluminium cables. Designed for demanding power applications, they support cable cross-sections up to* ***300 mm²*** *and flexible busbar dimensions up to 6 × 1 × 40 mm. Retaining all the proven advantages of OTL terminals, they* ***feature a 1500 V DC rating, UL94 V0 flame-retardant insulation****, Class A certification, and robust construction for long-term, safe operation.*

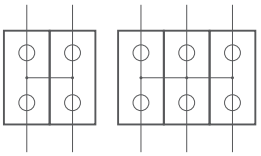





	OTL 95-2B	OTL 300-3B
Grey	MAA2095A20	MAA3300A20
Blue	MAA2095B20	MAA3300B20
Yellow-green	MAA2095Y20	MAA3300Y20

Technical data		
Conductor cross-section Cu, Al (mm²)	6 - 95	95 - 300
Busbar cross-section, Cu (mm²)	3x1x24	3x1x32 - 6x1x40
Nominal voltage AC / DC (V)	1000 / 1500	1000 / 1500
Nominal current (A)	245 (Cu) / 220 (Al)	630 (Cu) / 630 (Al)
Short time withstand current (Icw)	11,40 kA/1s	36,00 kA/1s
Width / Height / Length (mm)	42 / 51 / 84	101 / 78 / 120
Screw, hexagonal key	No. 6	No. 6, No. 8
Tightening torque (Nm)	12 Nm (6 - 25 mm²) 22 Nm (35 - 95 mm²) 8 Nm (3x1x24 mm)	35 Nm (95 - 150 mm²) 45 Nm (180 - 300 mm²) 15 Nm (3x1x32 - 6x1x40 mm)
Mounting	DIN rail, screw	DIN rail, screw
Weight (g)	125	499
Package (pcs)	24	1

Dimensions

OTL 95-2B

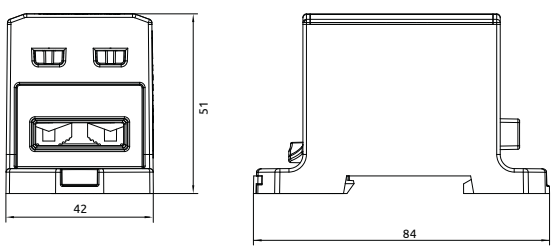

OTL 300-3B

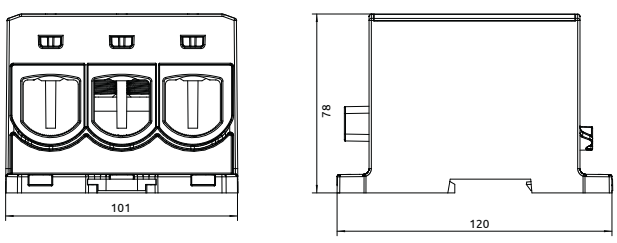

Protective plastic covers are accessories for universal terminals OTL used for blanking unused connection space or maintaining IP20 protection class with smaller wire cross-section. They are offered for OTL 50, OTL 95, OTL 150, 240 and OTL 300 series.













	Finger guard OTL 50	Finger guard OTL 95	Finger guard OTL 150	Finger guard OTL 240	Finger guard OTL 300
Grey	MAA0050A10	MAA0095A10	MAA0150A10	MAA0240A10	MAA0300A10
Technical data					
Width / Height / Length (mm)	14 / 31,5 / 10	18,3 / 45 / 10	22 / 47,5 / 10	28 / 57,5 / 10	32 / 57,5 / 10
Material	PA 66	PA 66	PA 66	PA 66	PA 66
Weight (g)	0,8	1,4	1,7	2,7	3,2
Package (pcs)	100	100	100	100	100

** Compatible with the new OTL terminals 1500 V DC*

Contact grease SR-1

Contact grease SR-1 is a lubrication grease and rust inhibitor designed for electrical connectors. It can be used both indoors and outdoors.

Materials

- Lithium thickened grease, containing antioxidants and corrosion inhibitors

Warning: prolonged or repeated skin contact may irritate the skin and produce dermatitis.

Advantages

- Good protection against both copper and steel corrosion
- Prevention of oxidation of aluminium surfaces
- Reduction of transition resistance while used with wire brush

Standards

- DIN 51502 K2K-30
- ISO 6743 ISO-L-XCCHA2

Contact grease SR-1 250 ml



	SR-1
Contact grease SR-1 250ml	MYA0001A10
Technical data	
Base oil viscosity / cSt at 40 °C	112
Base oil viscosity / cSt at 100 °C	10
Dropping point / °C	>180
Temperature range / °C	-30 to 110
Thickener	Lithium
SKF Emcor WWO distilled water / ISO 11007mod	0-0
Copper corrosion 24h / 100 °C / ASTM D4048	1b
Water resistance / DIN 51807 / 1	0-90
Oil separation 168h / 40 °C / IP121	6%

Material classification according to UL 94 V-0 standard (vertical burning test)

Criteria Conditions	94 V-0	94 V-1	94 V-2
Total flaming combustion for each specimen	≤ 10 sec	≤ 30 sec	≤ 30 sec
Total flaming combustion for all 5 specimens of any set	≤ 50 sec	≤ 250 sec	≤ 250 sec
Flaming and glowing combustion for each specimen after second burner flame application	≤ 30 sec	≤ 60 sec	≤ 60 sec
Cotton ignited by flaming drips from any specimen	No	No	Yes

Universal terminals OTL wiring connectivity

In case of Aluminum wire, only one wire is allowed to connect per connection

	Conductor cross-section (mm²) / number of copper wires per connection																Tightening torque (Nm)	In (A) Al / Cu
Type	1,5	2,5	4	6	10	16	25	35	50	70	95	120	150	185	240	300		
OTL 16	3 pcs	3 pcs	2 pcs	2 pcs	1 pcs	1 pcs											1,5 Nm (1,5 m²) 3,5 Nm (2,6 - 6 mm²) 7 Nm (10 - 16 mm²)	75 / 82
OTL 35 OTL 35-2 OTL 35-3X OTL 35-5X		3 pcs	3 pcs	3 pcs	3 pcs	2 pcs	1 pcs	1 pcs									3 Nm (2,5 - 16 mm²) 6 Nm (25 - 35 mm²)	120 / 135
OTL 50 OTL 50-2 OTL 50-3	3 pcs	3 pcs	3 pcs	3 pcs	3 pcs	3 pcs	2 pcs	1 pcs	1 pcs								1,5 Nm (1,5 - 2,5 mm²) 5 Nm (4 - 10 mm²) 10 Nm (16 - 50 mm²)	145 / 160
OTL 95 OTL 95-2 OTL 95-3				3 pcs	3 pcs	3 pcs	3 pcs	2 pcs	1 pcs	1 pcs	1 pcs						12 Nm (6 - 25 mm²) 22Nm (35 - 95 mm²)	220 / 245
OTL 150 OTL 150-2 OTL 150-3							3 pcs	3 pcs	3 pcs	2 pcs	1 pcs	1 pcs	1 pcs				14 Nm (25 - 50 mm²) 30 Nm (70 - 150 mm²)	290 / 320
OTL 240 OTL 240-2								3 pcs	3 pcs	3 pcs	2 pcs	2 pcs	1 pcs	1 pcs	1 pcs		26 Nm (35 - 120 mm²) 40 Nm (150 - 240 mm²)	380 / 425
OTL 300-1											3 pcs	2 pcs	2 pcs	1 pcs	1 pcs	1 pcs	30 Nm (95-150 mm²) 60 Nm (185-300 mm²)	440 / 490
OTL 300-3											3 pcs	2 pcs	2 pcs	1 pcs	1 pcs	1 pcs	35 Nm (95 - 150 mm²) 45 Nm (185 - 300 mm²)	630 / 630

We recommend using cable end sleeves, when using fine-strand wires with following cross-sections (single-wire connections):

OTL 16: 1,5 mm²…6 mm²
OTL 35: 2,5 mm²…10 mm²
OTL 50: 1,5 mm²…16 mm²
OTL 95: 6 mm²…35 mm²
OTL 150: 25 mm²…70 mm²
OTL 240: 35 mm²…120 mm²
OTL 300: 95 mm²…150 mm²

Main branch terminals HLAK are designed for copper and aluminium conductors with cross-section up to 25 mm². Insulation part is made from highly creepage current-safe polyamide PA66. Conductive part is made from nickel-plated brass. Protection class is IP20. Modern and compact design saving the space.



Conductors cross section Cu/Al (mm²)

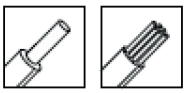

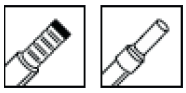

Conductors	Solid/ Multistranded	Stranded with sleeve
2x25 mm² per pole	1,5-25	1,5-16
2x16 mm² per pole	1,5-16	1,5-10











	HLAK25 1P	HLAK25 2P	HLAK25 3P	HLAK25 4P	HLAK25 5P
Grey	MAG1251A00	MAG2252A00	MAG3253A00	MAG4254A00	MAG5255A00
Blue	MAG1251B00	-	-	-	-
Red	MAG1251R00	-	-	-	-
Black	MAG1251S00	-	-	-	-
Green	MAG1251G00	-	-	-	-
Brown	MAG1251C00	-	-	-	-
Blue, green	-	MAG2251BG0	-	-	-
Grey, blue, green	-	-	MAG3251ABG	-	MAG5253ABG
Grey, blue	-	-	-	MAG4253AB0	-
Brown, black, grey, blue, green	-	-	-	-	MAG5251CSX

Technical data

Nominal voltage AC / DC (V) IEC	1000 / 1500	1000 / 1500	1000 / 1500	1000 / 1500	1000 / 1500
Nominal current (A) IEC	100	100	100	100	100
Number of poles	1	2	3	4	5
Stripping length (mm)	15	15	15	15	15
Tightening torque (Nm)	2,5	2,5	2,5	2,5	2,5
Width / Height / Length (mm)	21 / 39 / 42,5	40 / 39 / 42,5	60 / 39 / 42,5	80 / 39 / 42,5	99 / 39 / 42,5
Mounting	DIN rail	DIN rail	DIN rail	DIN rail	DIN rail
Weight (g)	65	130	189	254	314
Package (pcs)	10	2	2	1	1

Distribution blocks OJL

1000V AC
1500V DC

Bimetal
For copper and aluminium conductors

Up to
600 A
240 mm²

Class A

Certified according to standards EN 61238-1 and EN 60947-7-1



Distribution blocks OJL distribute larger cross-section conductors to smaller ones with various design options, including nominal connecting cross-sections of 6 mm² to 240 mm². They can be mounted on DIN rails or solid surfaces, offer a maximum operating temperature of 80 °C, and provide IP20 protection.



	OJL 80A	OJL 135A	OJL 200A	OJL 280A
Black / Grey	MAB1080S10	MAB1135S10	MAB1201S10	MAB1281S10
Blue / Grey	MAB1080B10	MAB1135B10	MAB1201B10	MAB1281B10
Green / Grey	MAB1080G10	MAB1135G10	MAB1201G10	MAB1281G10
Technical data				
Conductor cross-section				
Input wire Al/Cu (mm²)	2 x 2,5 - 16	1 x 2,5 - 35 1 x 2,5 - 10	1 x 10 - 70	1 x 35 - 120
Output wire Cu (mm²)	6 x 2,5 - 6	4 x 2,5 - 16 2 x 2,5 - 10	6 x 2,5 - 16	4 x 2,5 - 10 5 x 2,5 - 16 2 x 6 - 35
Nominal voltage AC / DC (V)	1000 / 1500	1000 / 1500	1000 / 1500	1000 / 1500
Nominal current (A)	80 (Cu) / 75 (Al)	135 (Cu) / 120 (Al)	200 (Cu) / 160 (Al)	280 (Cu) / 250 (Al)
Short time withstand current (Icw)	-	4,20 kA/1s	8,40 kA/1s	14,40 kA/1s
Width / Height / Length (mm)	23,6 / 40,6 / 52	24,3 / 49 / 90	32,4 / 46 / 75,8	44,4 / 51 / 97
Screw, hexagonal key	No. 2	No. 3 / 4	No. 3 / 5	No. 3 / 4 / 6
Tightening torque (Nm)	1 Nm (2,5-6 mm²) 6 Nm (10-16 mm²)	3 Nm (2,5 - 16 mm²) 6 Nm (25 - 35 mm²)-	3 Nm (2,5 - 16 mm²) 6 Nm (25 - 35 mm²) 10 Nm (50 - 70 mm²) -	3 Nm (2,5 - 16 mm²) 6 Nm (25 - 35 mm²) 10 Nm (50 - 70 mm²) 19 Nm (95 - 120 mm²)
Mounting	DIN rail	DIN rail, screw	DIN rail, screw	DIN rail, screw
Weight (g)	38	75	84	178
Package (pcs)	36	36	30	12

Dimensions

OJL 80A

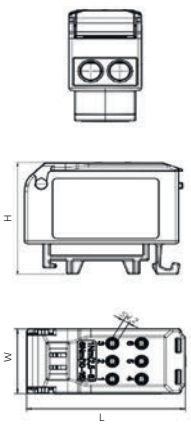

OJL 135A

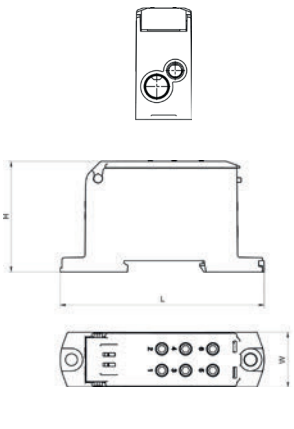

OJL 200A

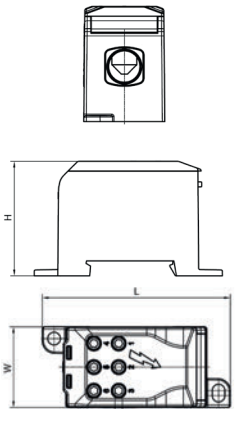

OJL 280A

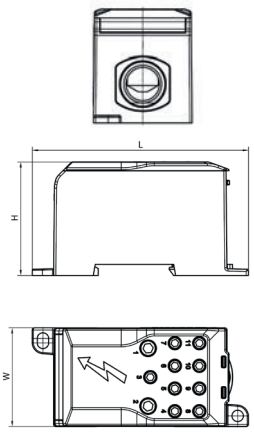









	OJL 400A	OJL 400AS*	OJL 400AF	OJL 400ASF*
Black / Grey	MAB1401S10	MAB1402S10	MAB1403S10	MAB1404S10
Blue / Grey	MAB1401B10	-	MAB1403B10	-
Green / Grey	MAB1401G10	-	MAB1403G10	-
Technical data				
Conductor cross-section				
Input wire Al/Cu (mm^2)	1 x 95 - 240	1 x 95 - 240	1 x Flexible busbar 10 x 24	1 x Flexible busbar 10 x 24
Output wire Cu (mm^2)	4 x 2,5 - 35 3 x 6 - 50	4 x 2,5 - 35 3 x 6 - 50	4 x 2,5 - 35 3 x 6 - 50	4 x 2,5 - 35 3 x 6 - 50
Nominal voltage AC / DC (V)	1000 / 1500	1000 / 1500	1000 / 1500	1000 / 1500
Nominal current (A)	600 (Cu) / 380 (Al)	600 (Cu) / 380 (Al)	600 (Cu) / 380 (Al)	600 (Cu) / 380 (Al)
Short time withstand current (Icw)	28,80 kA/1s	28,80 kA/1s	28,80 kA/1s	28,80 kA/1s
Width / Height / Length (mm)	51,4 / 51,2 / 100,3	51,4 / 51,2 / 100,3	51,4 / 51,2 / 100,3	51,4 / 51,2 / 100,3
Screw, hexagonal key	No. 4 / 5 / 8	No. 4 / 5 / 8	No. 4 / 5	No. 4 / 5
Tightening torque (Nm)	6 Nm (2,5 - 35 mm^2) 10 Nm (6 - 50 mm^2) 19 Nm (95 - 240 mm^2)	6 Nm (2,5 - 35 mm^2) 10 Nm (6 - 50 mm^2) 19 Nm (95 - 240 mm^2)	6 Nm (2,5 - 35 mm^2) 10 Nm (6 - 50 mm^2) 10 Nm (10x Cu 1x25 mm^2)	6 Nm (2,5 - 35 mm^2) 10 Nm (6 - 50 mm^2) 10 Nm (10x Cu 1x25 mm^2)
Mounting	DIN rail, screw	DIN rail, screw	DIN rail, screw	DIN rail, screw
Weight (g)	250	250	247	247
Package (pcs)	8	8	8	8

** Model can be sealed.*

Dimensions

OJL 400A

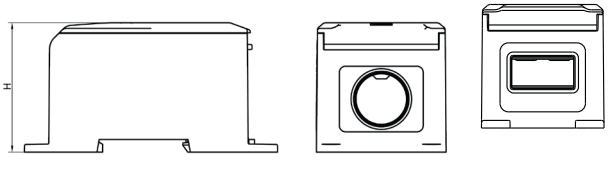

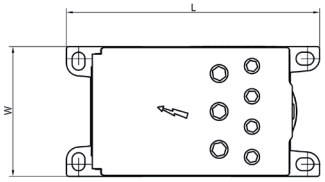

OJL busbar adapters are used for connecting OJL connectors to copper or aluminium busbars. Materials: Tin plated copper





BA 200A



BA 280A



BA 400A

Grey	MAB1201EBA	MAB1281EBA	MAB1401EBA
Technical data			
D	9,8	13,8	13,8
H	5,95	7,25	9,75
H1	4,8	5	5,2
L	45	61	70
W	14	23	30
W1	6,8	10,8	10,8
Weight (g)	22	49	90
Package (pcs)	10	10	10

Dimensions

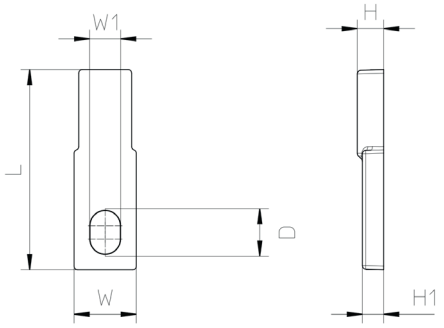

Distribution blocks Moblock

Up to
160 A
50 mm²

Insulation
between
phases

Certified according
to standards
EN 60947-1
EN 60947-7-1

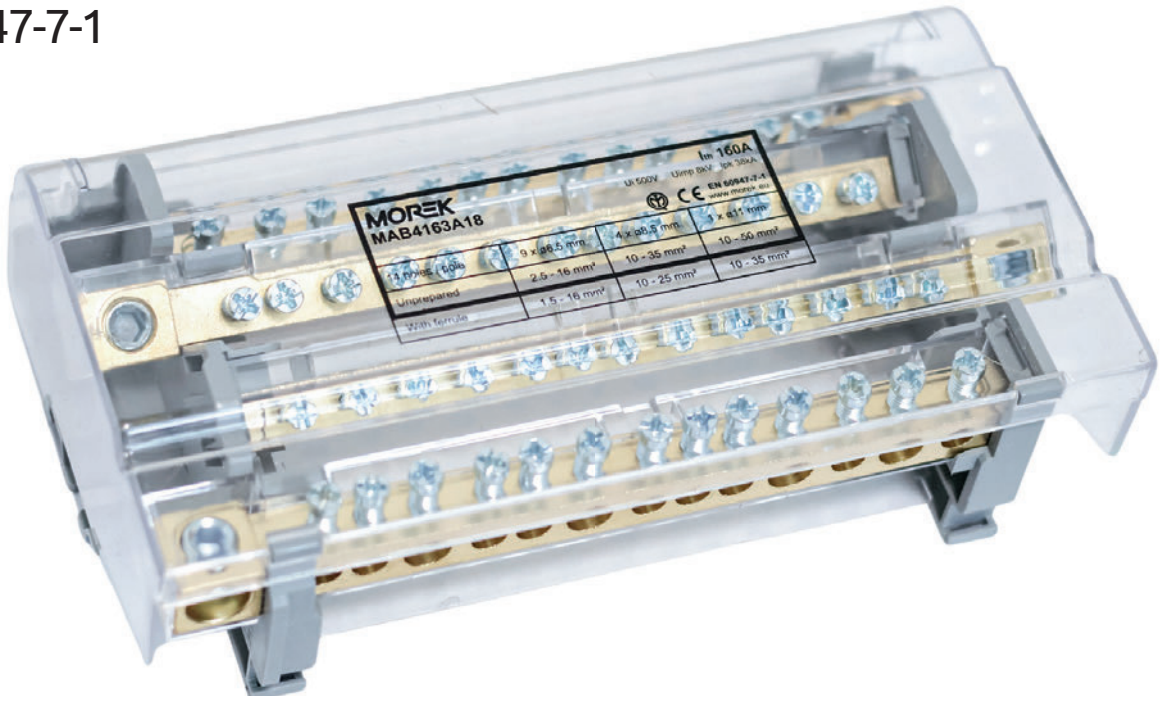

Moblock distribution blocks are available in two-pole (up to 35 mm² and 125A) and four-pole (up to 50 mm² and 160A) versions. They feature isolated brackets, a removable transparent cover, and convenient installation on DIN rails or panels. With brass conductive parts, galvanized steel connectors, and insulating barriers, these blocks ensure safe and efficient electrical connections.







	Moblock 2P 125A-7	Moblock 2P 125A-11	Moblock 2P 125A-15
	MAB2124A18	MAB2125A18	MAB2126A18
Technical data			
Conductor cross section (per pole) Input wire Cu (mm²) Output wire Cu (mm²)	 2 x 10 - 35 5 x 1,5 - 6	 2 x 10 - 35 7 x 1,5 - 6 / 2 x 10 - 25	 2 x 10 - 35 11 x 1,5 - 6 / 2 x 10 - 25
Nominal voltage AC / DC (V)	1000	1000	1000
Nominal current (A)	125	125	125
Width / Height / Length (mm)	49 / 52 / 72	49 / 52 / 109	49 / 52 / 137
Short-circuit current peak Ipk (kA)	20	19	19
Short-time withstand current (kA/1s)	6	4,2	4,2
Rated surge voltage (kV)	8	8	8
Min. length of insulated wire (mm)	13	13	13
Tightening torque nominal / max. (Nm)	2 / 2,5	2 / 2,5	2 / 2,5
Mounting	DIN rail, screw	DIN rail, screw	DIN rail, screw
Weight (g)	107	152	197
Package (pcs)	4	2	2

Dimensions

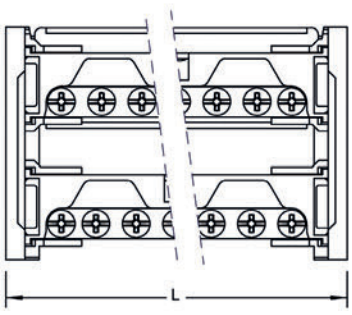

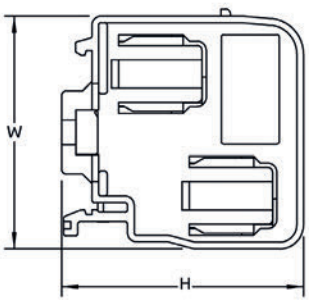

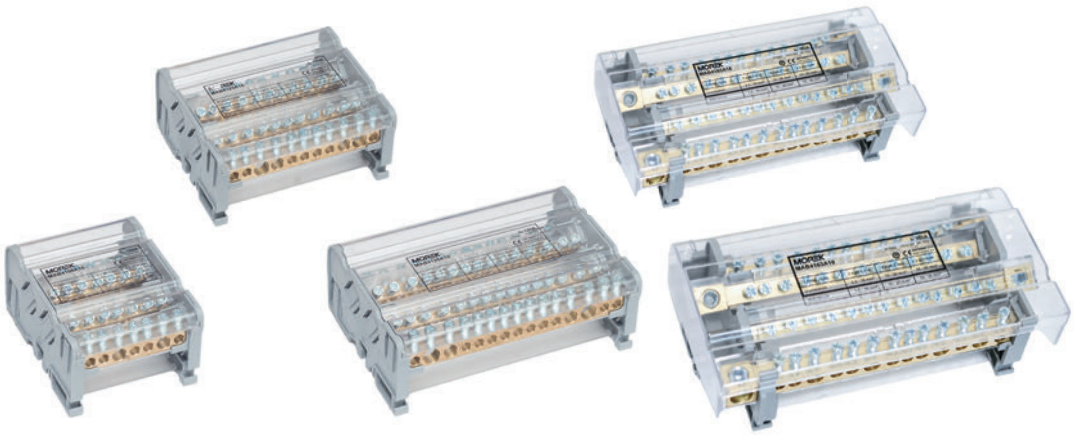

	Moblock 4P 125A-7	Moblock 4P 125A-11	Moblock 4P 125A-15	Moblock 4P 160A-9	Moblock 4P 160A-14
	MAB4124A18	MAB4125A18	MAB4126A18	MAB4162A18	MAB4163A18
Technical data					
Conductor cross section (per pole) Input wire Cu (mm²) Output wire Cu (mm²)	 2 x 10 - 35 5 x 1,5 - 6	 2 x 10 - 35 7 x 1,5 - 6 / 2 x 10 - 25	 2 x 10 - 35 11 x 1,5 - 6 / 2 x 10 - 25	 1 x 10 - 50 6 x 1,5 - 16 / 2 x 10 - 35	 1 x 10 - 50 9 x 1,5 - 16 / 4 x 10 - 35
Nominal voltage AC / DC (V)	500	500	500	500	500
Nominal current (A)	125	125	125	160	160
Width / Height / Length (mm)	97 / 52 / 72	97 / 52 / 108	97 / 52 / 137	99 / 54 / 131	99 / 54 / 181
Short-circuit current peak Ipk (kA)	20	19	19	38	38
Short-time withstand current (kA/1s)	6	4,2	4,2	6	6
Rated surge voltage (kV)	8	8	8	8	8
Min. length of insulated wire (mm)	13	13	13	13	13
Tightening torque nominal / max. (Nm)	2 / 2,5	2 / 2,5	2 / 2,5	2 / 2,5 (input wire 10 Nm)	2,5 (input wire 10 Nm)
Mounting	DIN rail, screw	DIN rail, screw	DIN rail, screw	DIN rail, screw	DIN rail, screw
Weight (g)	210	300	386	504	696
Package (pcs)	2	1	1	1	1

Dimensions

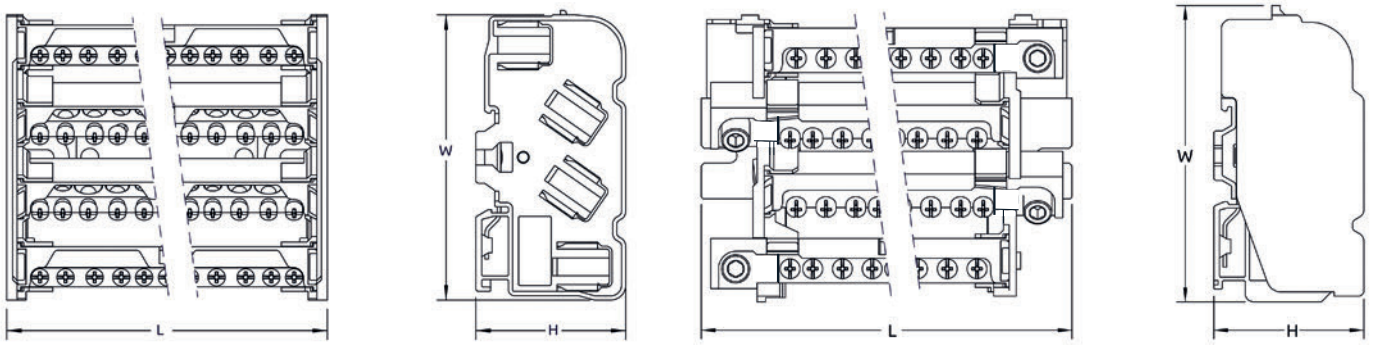

OT-PEN connectors simplify the conversion of TN-C (PEN) systems to TN-S (PE+N) systems by allowing the removal of the connecting bridge between the terminals. Suitable for both copper and aluminium conductors, these connectors feature extra measuring terminals and can be directly screw-mounted to the cabinet's backplate.



	OT-PEN 50	OT-PEN 95	OT-PEN 120	OT-PEN 150	OT-PEN 240
	MAB3050S10	MAB3095S10	MAB3120S10	MAB3150S10	MAB3240S10
Technical data					
Conductor cross-section Cu, Al (mm^2)	1,5 - 50	6 - 95	16 - 120	25 - 150	35 - 240
Nominal voltage (V)	690	690	690	690	690
Amperage (A)	160	245	275	320	425
Width / Height / Length (mm)	44 / 57 / 83	64 / 80 / 83	64 / 87 / 120	64 / 91 / 120	64 / 101,6 / 134,90
Dimensions L1 / L2 / W1 / AV / D (mm)	60 / 76 / 5,25 / 5 / 4	63,5 / 76 / 5,25 / 6 / 4	81,5 / 104 / 21 / 6 / 6	82 / 104 / 21 / 6 / 6	104,5 / 119 / 21 / 8 / 6
Screw, hexagonal key	No. 5	No. 6	No. 6	No. 6	No. 8
Tightening torque (Nm)	1,5 Nm (1,5 - 2,5 mm^2) 5 Nm (4 - 16 mm^2) 10 Nm (25 - 50 mm^2)	5 Nm (6 - 16 mm^2) 22 Nm (25 - 95 mm^2)	5 Nm (16 mm^2) 26 Nm (25 - 120 mm^2)	14 Nm (25 - 50 mm^2) 30 Nm (70 - 150 mm^2)	26 Nm (35 - 120 mm^2) 40 Nm (150 - 240 mm^2)
Mounting	Screw	Screw	Screw	Screw	Screw
Weight (g)	174	356	573	605	813
Package (pcs)	9	9	5	5	5

Dimensions

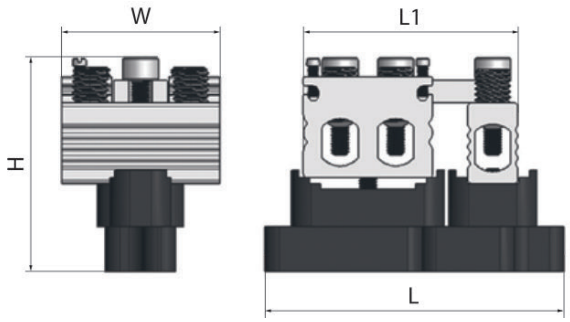

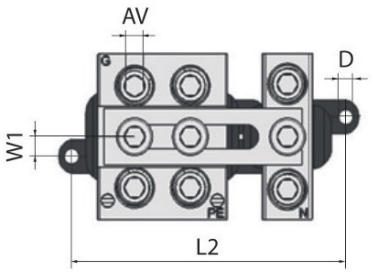

OL-PEN connectors enable the simple conversion of TN-C (PEN) systems to TN-S (PE+N) by removing the connecting bridge between the terminals. These connectors are suitable for use with both copper and aluminium conductors and can be directly screw-mounted to the cabinet's backplate.

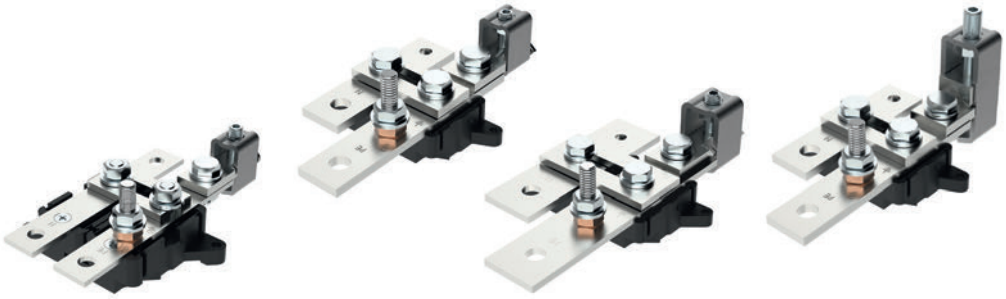

	OL-PEN 95	OL-PEN 185	OL-PEN 300	OL-PEN 240-2
	MAJ4095S10	MAJ4185S10	MAJ4300S10	MAJ5240S10
Technical data				
Conductor cross-section Cu, Al (mm^2)	25 - 95	95 - 185	185 - 300	2x 95 - 240
Nominal voltage (V)	690	690	690	690
Amperage (A)	245	361	490	425
Width / Height / Length (mm)	94 / 55 / 144	110 / 70 / 187,5	128,5 / 70 / 220	110 / 86 / 193
Dimensions L1 / W1 / W2 / D / D1 / D2 (mm)	50 / 84 / 34 / 5 / 8,5 / 8,5	43 / 99 / 41 / 5 / 8,5 / 12,5	52 / 117,5 / 50,5 / 5 / 10 / 12,5	43 / 99 / 41 / 5 / 8,5 / 12,5
Screw, hexagonal key (AV)	No. 4	No. 5	No. 6	No. 6
Tightening torque (Nm)	20	30	70	70
Mounting	Screw	Screw	Screw	Screw
Weight (g)	392	882	1248	1074
Package (pcs)	1	1	1	1

Dimensions

OL-PEN 95

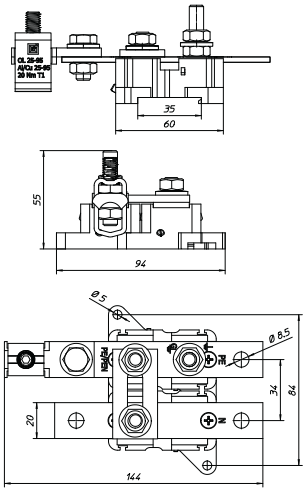

OL-PEN 185

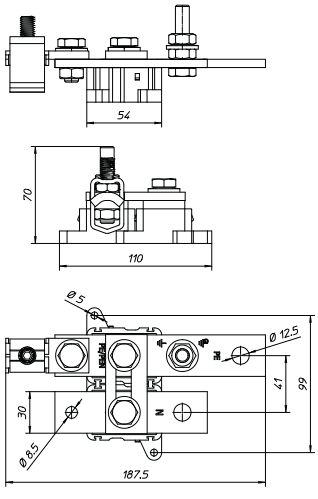

OL-PEN 300

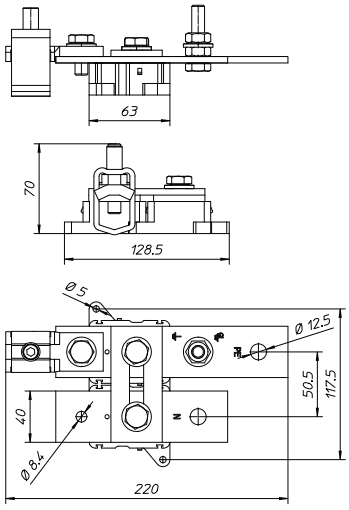

OL-PEN 240-2

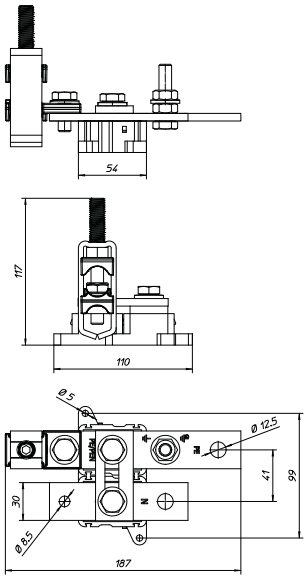

PEN connectors enable the simple conversion of TN-C (PEN) systems to TN-S (PE+N) by removing the connecting bridge between the terminals. These connectors are suitable for use with both copper and aluminium conductors and can be directly screw-mounted to the cabinet's backplate.





	PEN 95	PEN 185	PEN 300
	MAJ4095S11	MAJ4185S11	MAJ4300S11
Technical data			
Nominal voltage (V)	690	690	690
Amperage (A)	245	361	490
Width / Height / Length (mm)	94 / 55 / 116	110 / 70 / 152	128,5 / 70 / 181
Mounting	Screw	Screw	Screw
Weight (g)	316	740	961
Package (pcs)	1	1	1

Dimensions

PEN 95

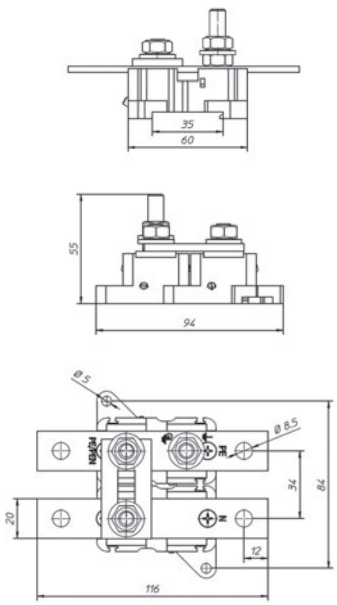

PEN 185

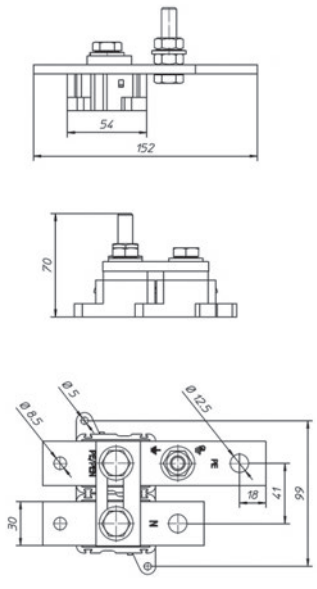

PEN 300

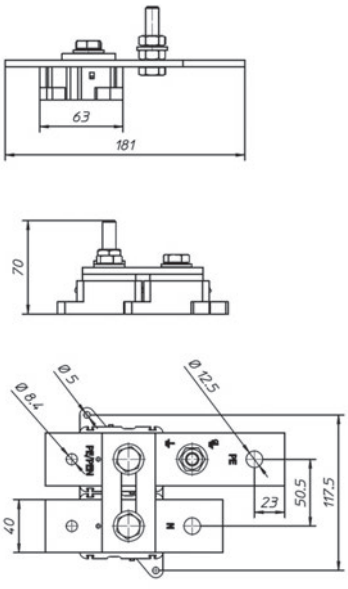

Insulated universal connectors OLI are intended for connecting copper and aluminium conductors in nominal cross-section from 25 to 300 mm². Connectors are designed for connecting copper or aluminium cables with flexible busbars or with cables with lug. Individual parts are made of stainless steel (clamp), copper (bridge), steel (screw) and plastic (housing). These connectors are heavy duty. Clamping them with stranded conductors does not require modification of wire ends (clamping surface of terminal, not flat screw spot). IP protection class for OLI terminals is IP20.

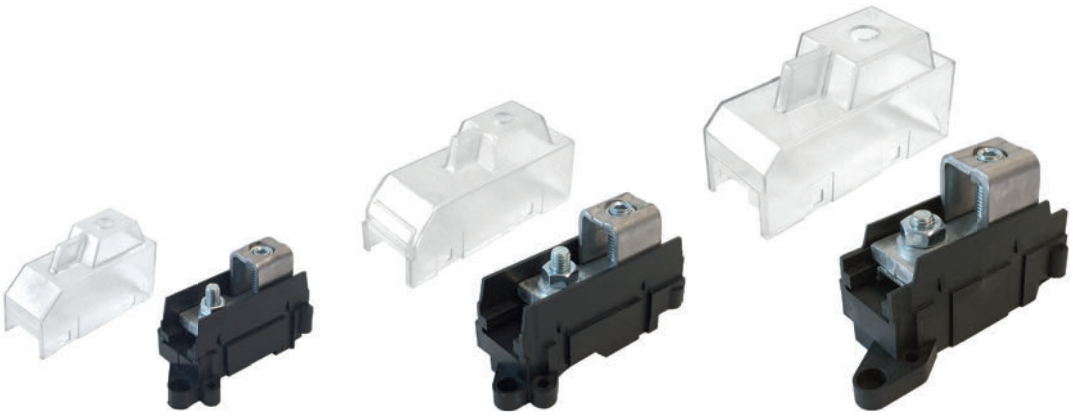

	OLI 95	OLI 185	OLI 300
	MAJ1095S10	MAJ1185S10	MAJ1300S10
Technical data			
Conductor cross-section Cu / Al (mm²)	25 - 95	95 - 185	185 - 300
Nominal voltage (V)	690	690	690
Nominal current (A)	320	400	560
Width / Height / Length (mm) L1 / W1 / W2	40 / 60 / 87 55 / 16,6 / 20	49 / 67 / 113 76,9 / 21,4 / 25	57 / 88 / 143 86,5 / 25 / 32
Screw, hexagonal key (AV)	SW 4	SW 5	SW 6
Tightening torque (Nm)	20	40	70
Mounting	Screw	Screw	Screw
Weight (g)	119	237	444
Package (pcs)	12	10	8

Dimensions

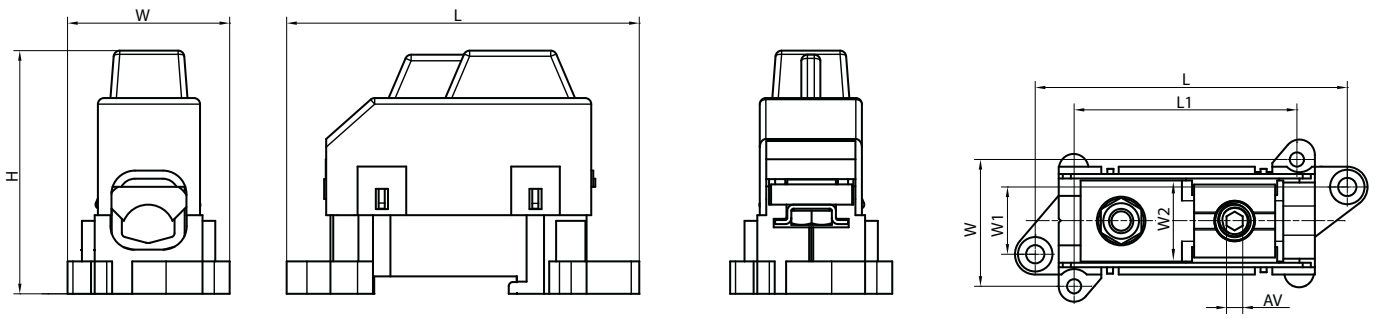

Bow terminals

Quick & simple
installation

Suitable for
cables and flexible busbars

Bimetallic
versions available *on the next page*

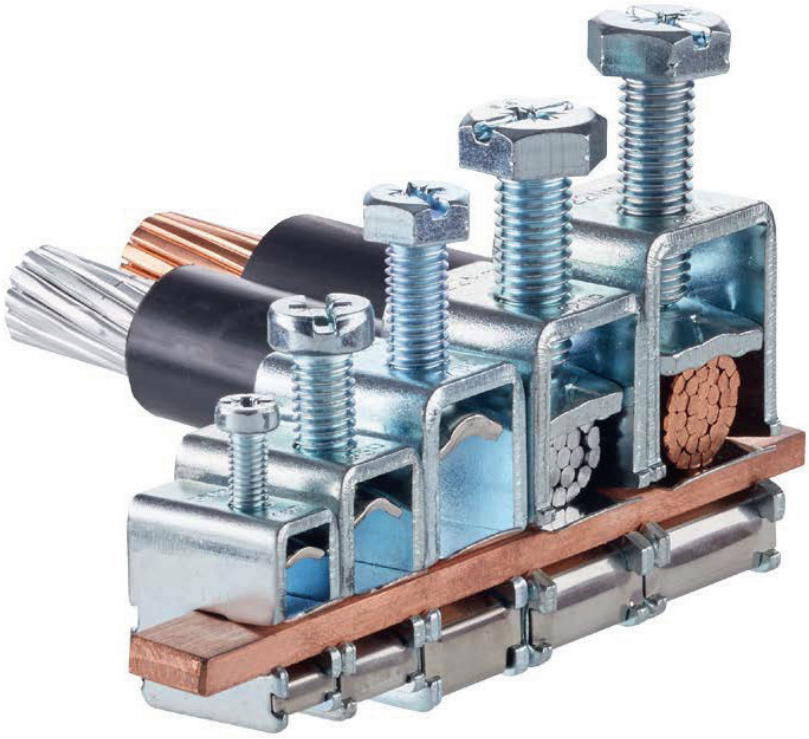

MAE-E Busbar Terminals (1.5–185 mm²)

Reliable screw-type busbar terminals for copper-to-copper or aluminium-to-aluminium conductor connections.

MAE-E busbar terminals provide a robust and space-efficient solution for connecting copper conductors to 5 mm or 10 mm copper busbars. Designed for industrial power distribution, they ensure consistent contact pressure and easy installation. Terminal with integrated holding spring, captive clamping screw and opened terminal space. Indication of nominal cross-section and tightening torque noted on the terminal.

- Quick and easy installation
- Ideal for on-site modifications
- Provides excellent electrical contact
- Visible indication of tightening torque
- Compatible with rigid and flexible conductors
- Galvanized steel body with stainless steel pressure spring
- Hexagonal screw head for controlled tightening
- Suitable for connecting copper conductors to copper busbars and aluminum conductors to aluminum busbars



Mounting	MAE 16E	MAE 35E	MAE 50E	MAE 70E	MAE 120E	MAE 185E
5 mm bar	MAE0165E15	MAE0355E15	MAE0505E15	MAE0705E15	MAE1205E15	MAE1855E15
10 mm bar	MAE0161E15	MAE0351E15	MAE0501E15	MAE0701E15	MAE1201E15	MAE1851E15
Technical data						
Cross-section Cu (mm²)	1,5 - 16	4 - 35	10 - 50	16 - 70	16 - 120	50 - 185
Flexible busbar max. width (mm)	-	9	9	9	15,5	20
Flexible busbar max. layers	-	6	6	6	10	10
Nominal voltage AC/DC (V)	1000	1000	1000	1000	1000	1000
Nominal current (A)	180	270	315	400	440	500
Width / Height / Length (mm) Cu bar (th. 5 mm) Cu bar (th. 10 mm)	 25,5 / 26,5 / 12 25,5 / 29 /12	 26,5 / 31,3 / 16,5 26,5 / 36,5 / 16,5	 26,5 / 35 / 16,5 26,5 / 40 / 16,5	 28 / 39 / 20,5 28 / 46 / 20,5	 29 / 46 / 23,5 29 / 52 / 23,5	 29 / 55 / 35 29 / 55 / 35
Screw / hexagonal key (AV)	Pz2 / SW 8	Pz3 / SW13	Pz3 / SW13	Pz3 / SW13	Pz3 / SW17	Pz3 / SW17
Tightening torque (Nm)	3	10	10	12	22	22
Weight (g) Cu bar (th. 5 mm) Cu bar (th. 10 mm)	 22 21	 44 45	 48 48	 62 68	 88 90	 102 96
Package (pcs)	40	25	25 / 20	15	10	10

Dimensions

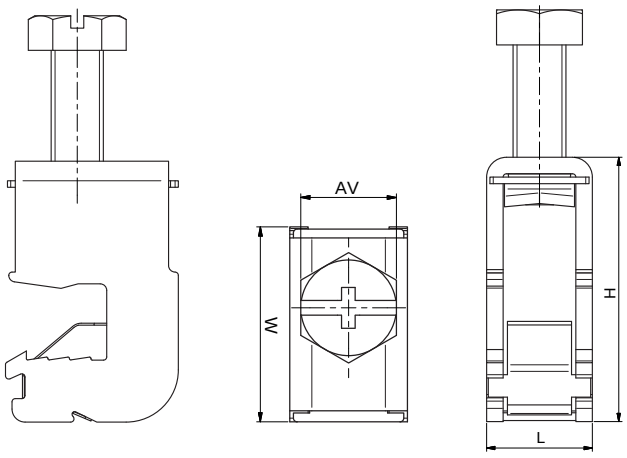

Bimetal Bow Terminals MAE-H (1.5–185 mm²)

MAE-H busbar terminals provide a robust and space-efficient solution for connecting both copper and aluminum conductors to 5 mm or 10 mm copper or aluminum busbars. Designed for industrial power distribution, they ensure consistent contact pressure and easy installation. Terminal with integrated holding spring, captive clamping screw and opened terminal space. Indication of nominal cross-section and tightening torque noted on the terminal. Features a hexagonal head for easy tightening, except on the MAE 35H.
Electrical continuity between dissimilar metals is ensured by an integrated bimetal interface, preventing galvanic corrosion and eliminating the need for additional tin plating or surface treatment.

- Quick and easy installation
- Ideal for on-site modifications
- Provides excellent electrical contact
- Visible indication of tightening torque
- Suitable for connecting aluminum cables to copper busbars or copper cables to aluminum busbars without additional TIN plating
- Suitable for connecting Moflex copper flexible busbars to aluminum busbars without additional TIN plating of flexible busbars







Mounting	MAE 16H	MAE 35H	MAE 70H	MAE 120H	MAE 185H
5 mm bar	MAE0165H15	MAE0355H15	MAE0705H15	MAE1205H15	MAE1855H15
10 mm bar	MAE0161H15	MAE0351H15	MAE0701H15	MAE1201H15	MAE1851H15

Technical data					
Cross-section Cu, Al (mm²)	1,5 - 16	4 - 35	16 - 70	16 - 120	50 - 185
Flexible busbar max. width (mm)	-	9	9	15,5	20
Flexible busbar max. layers	-	6	6	10	10
Nominal voltage AC/DC (V)	1000	1000	1000	1000	1000
Nominal current (A)	180	270	400	440	500
Width / Height / Length (mm) 5 mm bar 10 mm bar	 - 25,5 / 29 /12	 26,5 / 32 / 16,5 26,5 / 37 / 16,5	 27,5 / 41 / 21 27,5 / 46 / 21	 29 / 46 / 24 29 / 51 / 24	 29 / 52 / 30 29 / 56 / 30
Screw / hexagonal key (AV)	Pz2	Pz3	Pz3 / SW13	Pz3 / SW17	Pz3 / SW17
Tightening torque (Nm)	3	6	12	22	22
Weight (g) 5 mm bar 10 mm bar	 - 21	 - 45	 - 68	 88 90	 102 102
Package (pcs)	40	25 / 20	15 / 10	10	10

Dimensions

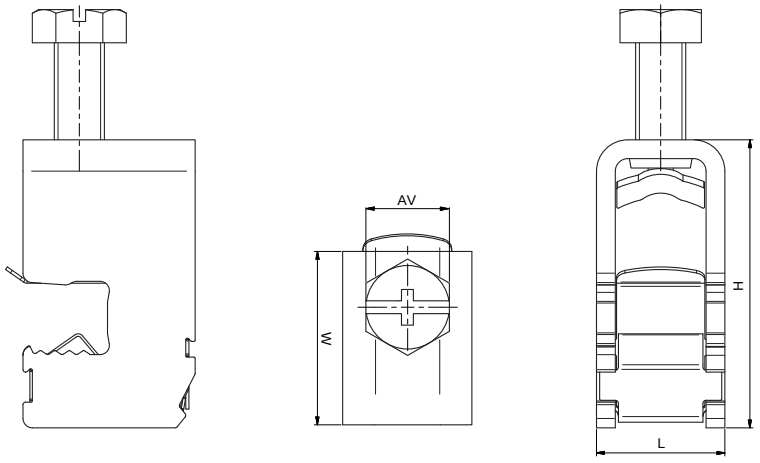

Device connectors SR

Direct connection
to the device

Bimetal
For copper and aluminium conductors

Class A

Certified according to standards EN 61238-1 and EN 60947-7-1



Device connectors SR are designed for connecting aluminum and copper cables directly to devices such as circuit breakers and control equipment. They allow for the reduction of connection cross-sections based on the dimensions of connection openings and wire gauge. The body and tightening screws are made of tin-plated aluminum, ensuring reliable conductivity, while the self-extinguishing polyamide cover provides insulation and fire resistance. The connectors have an IP20 protection class, making them suitable for various electrical installations.



	SR 50	SR 50M	SR 50 (IP20)	SR 50 (IP00)	SR 2x50RB
Left handed		MAC1053A10	-	-	-
Standard	MAC1050A10	MAC1051A10	MAC1056A10	MAC1057A10	MAC2050A10
Right handed		MAC1052A10	-	-	-
Technical data					
Conductor cross-section Cu, Al (mm²)	6 - 50	6 - 50	2,5 - 50	2,5 - 50	2 x 6 - 50
Measurement wire	-	2,5	-	-	-
Nominal voltage AC / DC (V)	690	690	690	690	690
Nominal current Cu / Al (A)	160 / 100	160 / 100	80 / 75	80 / 75	320 / 250
Width / Height / Length (mm)	17 / 32 / 49,8	17 / 32 / 49,8	17,5 / 27,5 / 42,5	17 / 23 / 40,4	22,4 / 41,2 / 71,8
Dimensions L1 / H1 / H2 / W1 (mm)	14,6 / 5 / 10 / 6	14,6 / 5 / 10 / 6	-	-	27,3 / 11,4 / 10,3 / 11,8
Screw, hexagonal key	No. 5	No. 5	No. 5	No. 5	No. 5
Tightening torque (Nm)	6 Nm (6 - 10 mm²) 10 Nm (16 - 50 mm²)	6 Nm (6 - 10 mm²) 10 Nm (16 - 50 mm²)	3 Nm (2,5 - 6 mm²) 7 Nm (10 - 50 mm²)	3 Nm (2,5 - 6 mm²) 7 Nm (10 - 50 mm²)	6 Nm (6 - 10 mm²) 10 Nm (16 - 50 mm²)
Weight (g)	22,8	23,2	16	16	26,2
Package (pcs)	50	50	50	50	30

Model specification (marking) M - model has connector for measurement I RB - rounded busbar

SR 50(M)



Right-handed Standard Left-handed

Dimensions

SR 50(M)

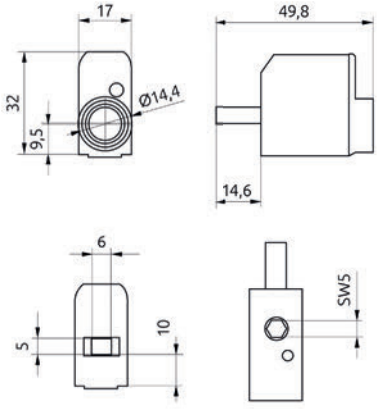

SR 50 (IP20)

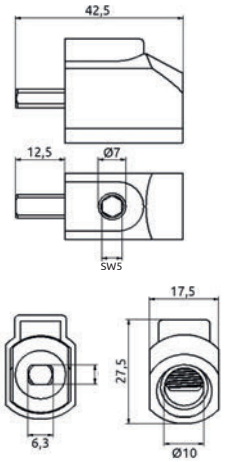

SR 50 (IP00)

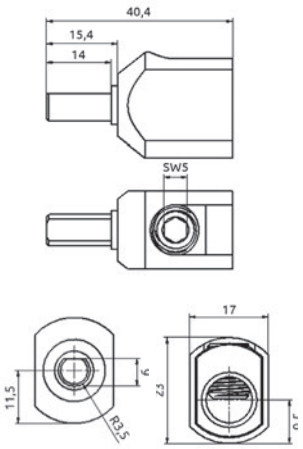

SR 2x50RB

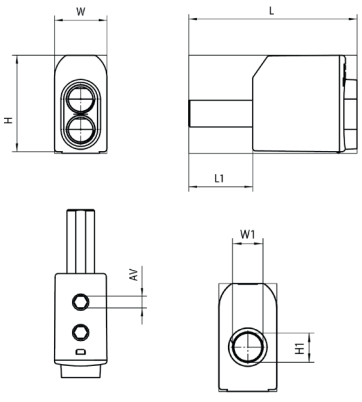





	SR 95	SR 95M	SR 95SBM	SR 95RBM
Standard	MAC9500A10	MAC9501A10	MAC9503A10	MAC9502A10
Technical data				
Conductor cross-section Cu, Al (mm²)	16 - 95	16 - 95	16 - 95	16 - 95
Measurement wire	.	2,5	2,5	2,5
Nominal voltage AC / DC (V)	690	690	690	690
Nominal current Cu / Al (A)	230 / 180	230 / 180	230 / 180	230 / 180
Width / Height / Length (mm)	23,4 / 51 / 67,8	23,4 / 51 / 67,8	23,4 / 51 / 67,8	23,4 / 51 / 67,8
Dimensions L1 / H1 / H2 / W1 (mm)	26,6 / 9 / 3,5 / 10	26,6 / 9 / 3,5 / 10	26,6 / 9 / 3,5 / 16	16,6 / 9 / 3,5 / 10
Screw, hexagonal key	No. 6	No. 6	No. 6	No. 6
Tightening torque (Nm)	12 Nm (16 - 50 mm²) 20 Nm (70 - 95 mm²)	12 Nm (16 - 50 mm²) 20 Nm (70 - 95 mm²)	12 Nm (16 - 50 mm²) 20 Nm (70 - 95 mm²)	12 Nm (16 - 50 mm²) 20 Nm (70 - 95 mm²)
Weight (g)	56	56	58	56 / 58
Package (pcs)	30	30	30	30

Model specification (marking) M - model has connector for measurement I RB - rounded busbar

Dimensions

SR 95(M)

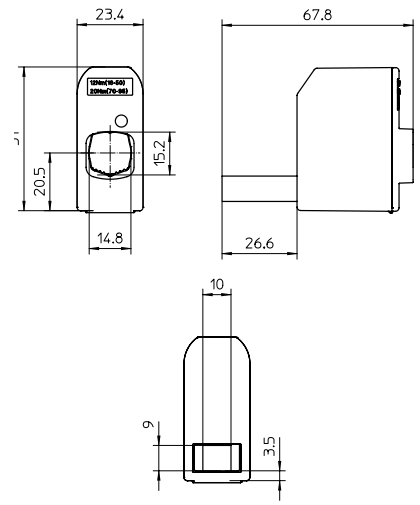

SR 95SB(M)

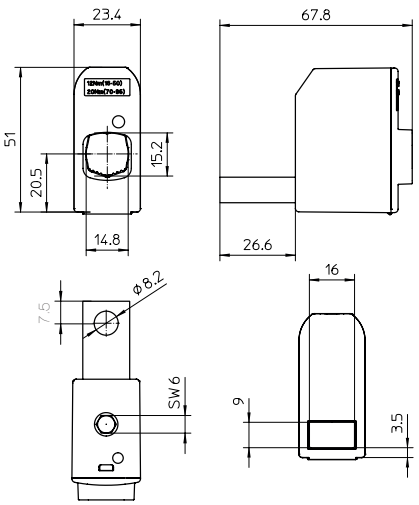

SR 95RB(M)

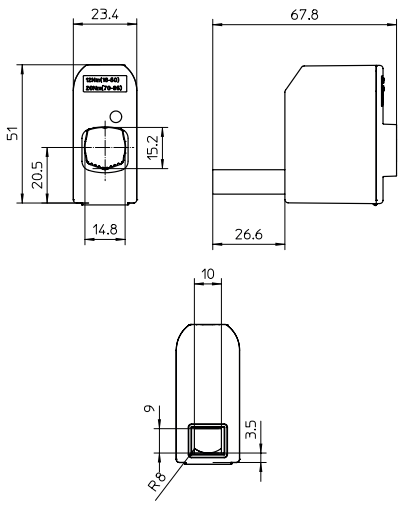

Heavy duty connectors OL

Up to
800 A
2x300 mm²

Bimetal
For copper and aluminium conductors

Made of
stainless steel
– suitable for harsh environments



OL heavy-duty connectors are designed for connecting copper and aluminium conductors ranging from 6 to 2 x 300 mm². With parts made of stainless steel, copper, and steel, these connectors are robust and reliable. They allow for easy clamping of stranded conductors without the need for modifying wire ends, and installation can be done without special tools.








	OL 70	OL 70M	OL 70T	OL 95	OL 95T	OL 150
	MAJ1070E10	MAJ1071E10	MAJ1072E10	MAJ1095E10	MAJ1096E10	MAJ1150E10
Technical data						
Conductor cross-section Cu, Al (mm²)	6 - 70	6 - 70	6 - 70	25 - 95	25 - 95	25 - 150
Nominal voltage (V)	690	690	690	690	690	690
Nominal current Cu / Al (A)	270 / 270	270 / 270	270 / 270	320 / 320	320 / 320	285 / 230
Width / Height / Length W1 / L1 (mm)	16,2 / 30 / 37	16,2 / 23 / 37	16,2 / 30 / 38 10 / 17	18 / 33 / 48	18 / 33 / 50 10 / 20	23 / 38 / 60
Hole Ø AV / hole centre to tab end AV1 (mm)	7 / 7,5	7 / 7,5	-	9 / 10	-	11 / 13,5
Screw, hexagonal key	No. 4	No. 4	No. 4	No. 4	No. 4	No. 5
Tightening torque (Nm)	5,6	5,6	5,6	20	20	30
Weight (g)	44	36	44	76	69	130
Package (pcs)	30	30	30	15	15	15








	OL 185	OL 240M	OL 300	OL 150-2	OL 240-2	OL 300-2
	MAJ1185E10	MAJ1240E10	MAJ1300E10	MAJ2150E10	MAJ2240E10	MAJ2300E10
Technical data						
Conductor cross-section Cu, Al (mm²)	95 - 185	95 - 240	185 - 300	2 x 50 - 150	2 x 95 - 240	2 x 185 - 300
Nominal voltage (V)	690	690	690	690	690	690
Nominal current Cu / Al (A)	400 / 400	400 / 400	560 / 560	579 / 455	806 / 631	800 / 800
Width / Height / Length	24 / 40 / 60	26,3 / 40 / 61	32 / 52 / 76	25 / 64 / 59	30 / 78 / 60	38 / 91 / 85
Hole Ø AV / hole centre to tab end AV1 (mm)	11 / 12	11 / 12	13 / 17	11 / 12	11 / 13	13 / 20
Screw, hexagonal key	No. 5	No. 5	No. 5	No. 5	No. 6	No. 6
Tightening torque (Nm)	40	40	70	40	70	70
Weight (g)	142	140	287	240	345	544
Package (pcs)	15	15	3	3	3	3

Dimensions

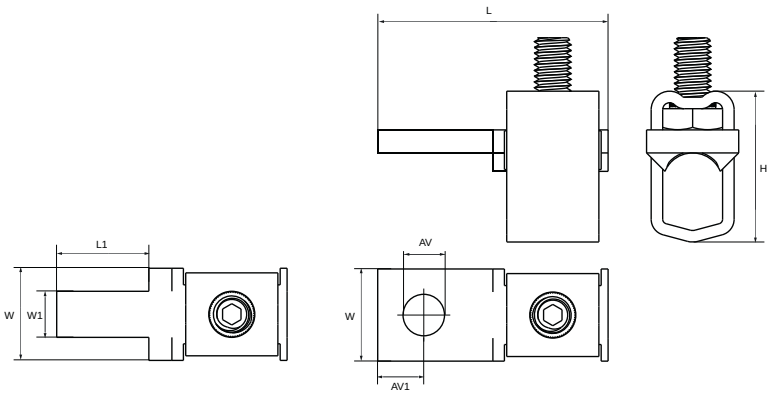

Morek OT-connectors offer a reliable and efficient solution for connecting aluminium and copper cables. Made from durable aluminium with a corrosion-resistant tin plating, they ensure reliable conductivity. Easy to install without special tools, they're ideal for on-site applications and field work.



	OT 50	OT 50-2	OT 95	OT 95-2	OT 95-22	OT 150	OT 150-2	OT 150-22
	MAC1050E10	MAC2050E11	MAC1095E11	MAC2095E11	MAC2095E12	MAC1150E11	MAC2150E11	MAC2150E12
Technical data								
Conductor cross-section Cu / Al (mm^2)	1,5 - 50	2x 1,5 - 50	6 - 95	2x 6 - 95	2x 6 - 95	25 - 150	2x 25 - 150	2x 25 - 150
Nominal voltage AC (V)	1000	1000	1000	1000	1000	1000	1000	1000
Nominal current Cu / Al (A)	160/145	320/290	245/220	490/220	490/220	320/290	640/290	640/290
Width / Height / Length (mm)	14/21,5/35	26,6/41/21,5	20/47/26,6	37,5/46/30	37,5/41/30	26/62/36	46,3/62/37	46,3/62/37
Hole diameter (mm) AV/AV1/+/AV2	8,5/10,5	8,5/9,5/+3	13/10,5/+2,5	10,5/10,5/+3	6,5/8,5/+3,5/10,5	12,5/12,5/+4	12,5/12,5/+4	8,5/10,5/+3,5/22,5
Screw, hexagonal key	No. 5	No. 5	No. 6	No. 6	No. 6	No. 6	No. 6	No. 6
Tightening torque (Nm)	3,5 (1,5-10 mm^2) 12 (16-50 mm^2)	1,5 (1,5-2,5 mm^2) 5 (4-10 mm^2) 10 (16-50 mm^2)	12 (6-25 mm^2) 22 (35-95 mm^2)	12 (6-25 mm^2) 22 (35-95 mm^2)	12 (6-25 mm^2) 22 (35-95 mm^2)	14 (25-50 mm^2) 35 (70-150 mm^2)	14 (25-50 mm^2) 30 (70-150 mm^2)	14 (25-50 mm^2) 30 (70-150 mm^2)
Weight (g)	10	47	29	69	69	57	118	118
Package (pcs)	30	30	30	30	30	20	20	20



	OT 240	OT 240-2	OT 240-22	OT 300	OT 300-22
	MAC1240E11	MAC2240E11	MAC2240E12	MAC1300E11	MAC2300E11
Technical data					
Conductor cross-section Cu / Al (mm^2)	35 - 240	2x 35 - 240	2x 35 - 240	95 - 300	2x 95 - 300
Nominal voltage AC (V)	1000	1000	1000	1000	1000
Nominal current Cu / Al (A)	425 / 380	850 / 380	850 / 380	490 / 440	980 / 630
Width / Height / Length (mm)	32 / 74 / 43	55 / 74 / 41	55 / 70 / 41	38 / 75 / 50	63 / 75 / 55
Hole diameter (mm) AV/AV1/+/AV2	12,5 / 12,5 /+4	12,5 / 12,5 /+4	10,5 / 12,5 /+3,5 / 27	12,5 / 12,5 /+4	12,5 / 12,5 /+4 / 31
Screw, hexagonal key	No. 8	No. 8	No. 8	No. 8	No. 8
Tightening torque (Nm)	26 (35-120 mm^2) 46 (150-240 mm^2)	26 (35-120 mm^2) 40 (150-240 mm^2)	26 (35-120 mm^2) 40 (150-240 mm^2)	30 (95-150 mm^2) 60 (185-300 mm^2)	30 (95-150 mm^2) 60 (185-300 mm^2)
Weight (g)	108	229	229	160	325
Package (pcs)	10	10	10	10	6

Dimensions

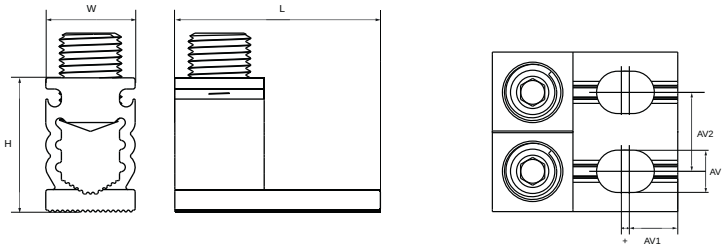

Universal connectors OTH

Bimetal

For copper and aluminium conductors

Up to
4x300 mm²



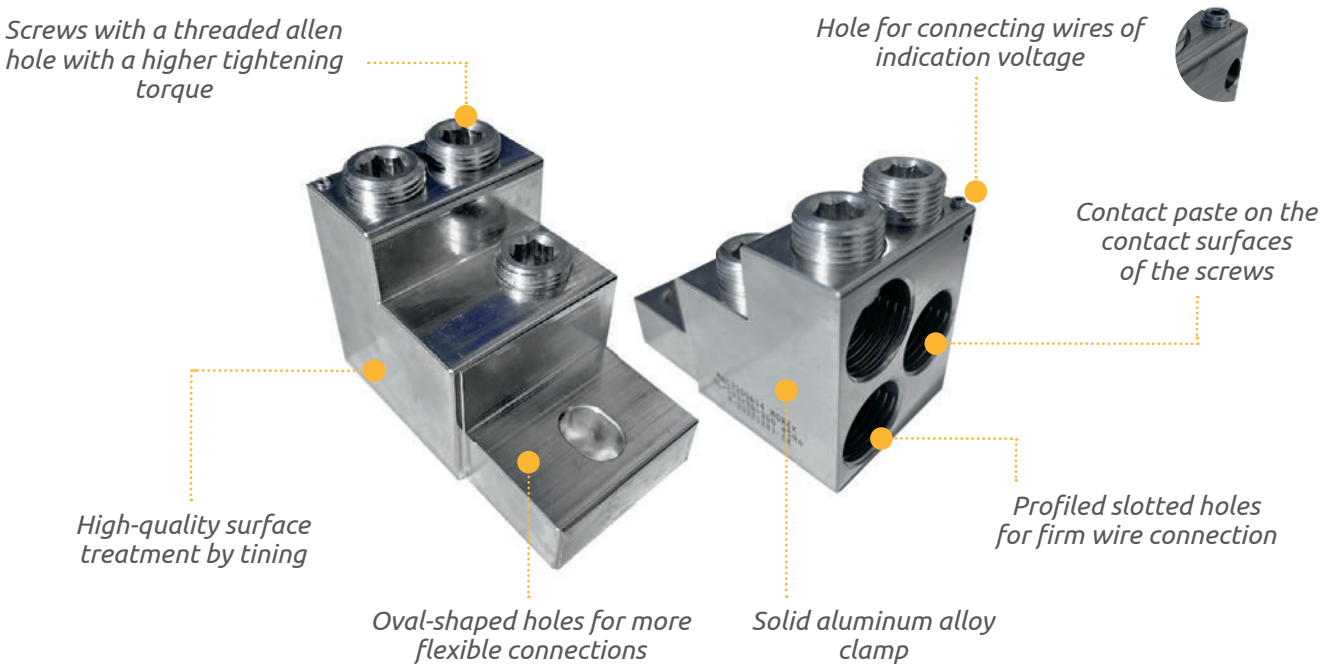

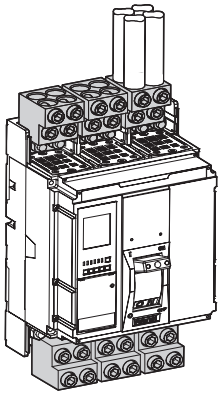

OTH universal connectors directly connect copper and aluminium wires to switchgear devices, allowing for the connection of two, three, or four wires up to 300 mm² without cable lugs. Their compact and economical design features easy installation and a small size.



OTH 301-3



OTH 300-2

	MAC3301A14	MAC2300A14
Technical data		
Conductor cross-section Cu, Al (mm²)	3 x 70 - 300 + 1 x 1,5 - 4	2 x 70 – 300 + 1 x 1,5 – 4
Nominal voltage AC/DC (V)	1000	1000
Nominal current (A)	1250	800
Width / Height / Length (mm)	54 / 63,5 / 94	30 / 63,5 / 94
Number of mounting holes	1	1
Diameter connecting hole (mm)	12,5	12,5
Screw, hexagonal key	No. 10	No. 10
The length of the uninsulated conductor (mm)	27 / 56	27 / 56
Tightening torque (Nm)	45	45
Weight (g)	410	213
Package (pcs)	2	3
Compatibility		
ABB Emax E 1.2 F up to 1600A, Tmax T7 F up to 1600A	-	No
ABB Tmax T6 F up to 1000A, Tmax T5 (XT5) up to 630A	-	Yes
Schneider NS630b up to 1600A	-	No
Schneider NSX400-630	-	Yes
Eaton NZML4-VE1250, NZM4-XKA up to 1250	-	No
Eaton NZMS2-4-VE250, NZMH3-4-VE630	-	Yes
Siemens 3VA66 1000A, 3VA271 1250-1600A	-	No
Siemens 3VA5 630A	-	Yes
LS TS630, TS800	-	Yes
Chint NM8N-1600A	-	No
Chint NM8N up to 630A	-	Yes
Schrack Technik MX3	-	Yes
Schrack Technik MX4	-	No

Contact us if you have further questions about compatibility!

NB! In order to use 300 mm² cables with OTH300 connectors, you need to use shorter screws. Please notify us about it during the purchase and we will supply the screws with your order.

Dimensions

OTH 301-3

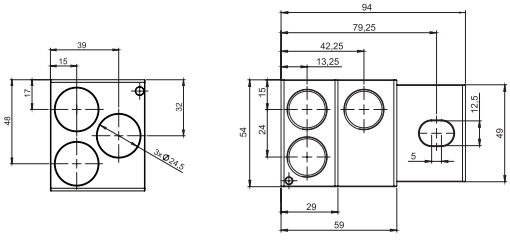

OTH 300-2

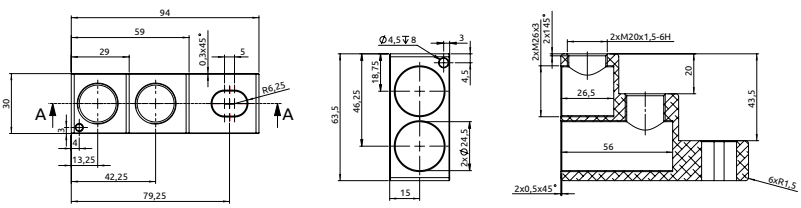



OTH 300-2C



OTH 300-3

	MAC2300A15	MAC3300A14
Technical data		
Conductor cross-section Cu, Al (mm²)	2 x 70 – 300 + 1 x 1,5 – 4	3 x 70 – 300 + 1 x 1,5 – 4
Nominal voltage AC/DC (V)	1000	1000
Nominal current (A)	800	1250
Width / Height / Length (mm)	30 / 63,5 / 94	54 / 63,5 / 94
Number of mounting holes	1	2
Diameter connecting hole (mm)	12,5	12,5
Screw, hexagonal key	No. 10	No. 10
The length of the uninsulated conductor (mm)	27 / 56	27 / 56
Tightening torque (Nm)	45	45
Weight (g)	213	406
Package (pcs)	3	2
Compatibility		
ABB Emax E 1.2 F up to 1600A, Tmax T7 F up to 1600A	No	Yes
ABB Tmax T6 F up to 1000A, Tmax T5 (XT5) up to 630A	Yes	No
Schneider NS630b up to 1600A	No	Yes
Schneider NSX400-630	Yes	No
Eaton NZML4-VE1250, NZM4-XKA up to 1250	No	Yes
Eaton NZMS2-4-VE250, NZMH3-4-VE630	Yes	No
Siemens 3VA66 1000A, 3VA271 1250-1600A	No	Yes
Siemens 3VA5 630A	Yes	No
LS TS630, TS800	Yes	No
Chint NM8N-1600A	No	Yes
Chint NM8N up to 630A	Yes	No
Schrack Technik MX3	Yes	No
Schrack Technik MX4	No	Yes

Contact us if you have further questions about compatibility!

NB! In order to use 300 mm² cables with OTH300 connectors, you need to use shorter screws.
Please notify us about it during the purchase and we will supply the screws with your order.

Dimensions

OTH 300-2C

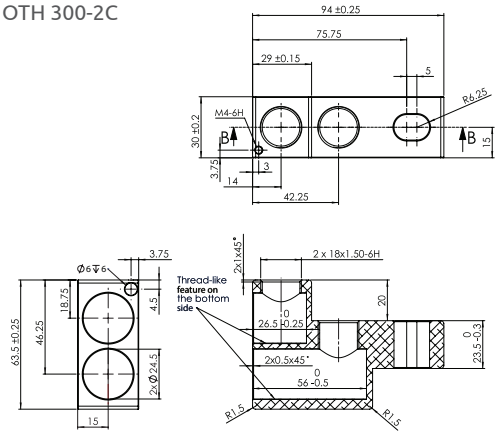

OTH 300-3

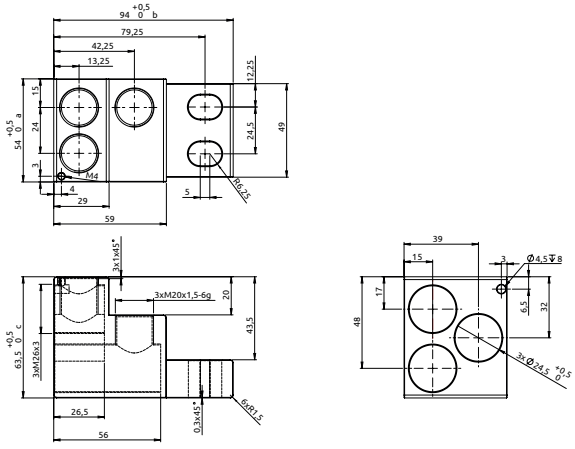



OTH 240-4



OTH 300-4

	MAC4240A15	MAC4300A14
Technical data		
Conductor cross-section Cu, Al (mm²)	4 x 50 - 240 + 1 x 1,5 - 4	4 x 50 - 300 + 1 x 1,5 - 4
Nominal voltage AC/DC (V)	1000	1000
Nominal current (A)	1600	1600
Width / Height / Length (mm)	54 / 63,5 / 94	59 / 63,5 / 94
Number of mounting holes	2	2
Diameter connecting hole (mm)	12,5	12,5
Screw, hexagonal key	No. 10	No. 10
The length of the uninsulated conductor (mm)	25 / 55	25 / 55
Tightening torque (Nm)	45	45
Weight (g)	410	330
Package (pcs)	2	2
Compatibility		
ABB Emax E 1.2 F up to 1600A, Tmax T7 F up to 1600A	Yes	Yes
ABB Tmax T6 F up to 1000A, Tmax T5 (XT5) up to 630A	No	No
Schneider NS630b up to 1600A	Yes	Yes
Schneider NSX400-630	No	No
Eaton NZML4-VE1250, NZM4-XKA up to 1250	Yes	Yes
Eaton NZMS2-4-VE250, NZMH3-4-VE630	No	No
Siemens 3VA66 1000A, 3VA271 1250-1600A	Yes	Yes
Siemens 3VA5 630A	No	No
LS TS630, TS800	No	No
Chint NM8N-1600A	Yes	Yes
Chint NM8N up to 630A	No	No
Schrack Technik MX3	No	No
Schrack Technik MX4	Yes	Yes

Contact us if you have further questions about compatibility!

NB! In order to use 300 mm² cables with OTH300 connectors, you need to use shorter screws.
Please notify us about it during the purchase and we will supply the screws with your order.

Dimensions

OTH 240-4

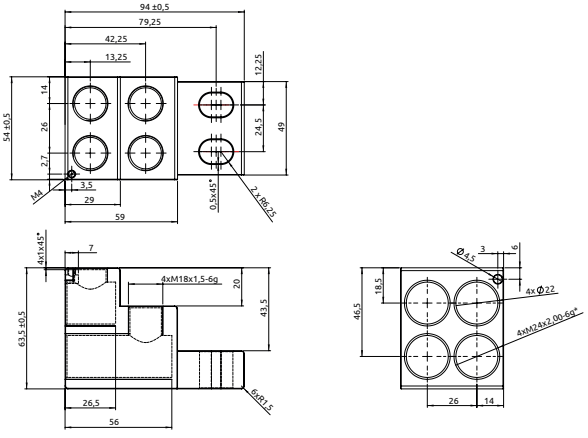

OTH 300-4

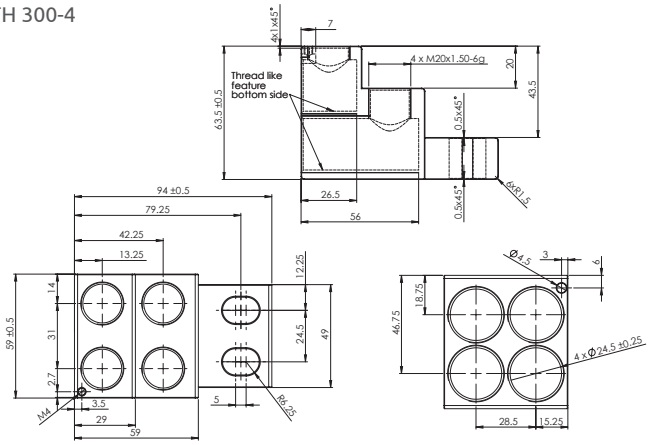

Terminals BB

Customized terminal solutions

Up to
35 mm²

Mounting on
DIN rail



The BB-series terminals offer flexible connections in projects, with adjustable terminal bars that can be cut to size and mounted using special holders. Made with brass conductive parts and Zn galvanized steel connectors, these terminals are available in various sizes, accommodating cross-sections of up to 35 mm² for versatile applications.

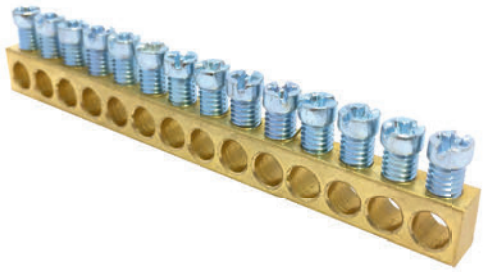

Order code	Type	Number of connections / Screw	Conductor cross section Cu (mm²)	Hole diameter (mm)	Nominal current (A)	Dimensions (mm) W / H / L	Weight (g)	Compatible with	Package (pcs)
MAD0007E21	BB7	7 / M5	1,5 - 16	5,3	63	6,5 / 9 / 47	22	BB3	100
MAD0009E21	BB9	9 / M5	1,5 - 16	5,3	63	6,5 / 9 / 61	28	BB3	70
MAD0014E21	BB14	14 / M5	1,5 - 16	5,3	63	6,5 / 9 / 94	42	BB3	50
MAD0024E21	BB24	24 / M5	1,5 - 16	5,3	63	6,5 / 9 / 160	72	BB3	30
MAD0032E21	BB32	32 / M5	1,5 - 16	5,3	63	6,5 / 9 / 213	96	BB3	20
MAD0042E21	BB42	42 / M5	1,5 - 16	5,3	63	6,5 / 9 / 279	123	BB3	20
MAD0052E21	BB52	52 / M5	1,5 - 16	5,3	63	6,5 / 9 / 345	152	BB3	20
MAD0147E21	BB147	147 / M5	1,5 - 16	5,3	63	6,5 / 9 / 972	436	BB3	30
MAD0142E21	BB142-10	142 / M5	1,5 - 16	5,5	63	8 / 10 / 1000	553	BB3	25
MAD0111E21	BB111	111 / M5	1,5 - 25	6,5	100	10 / 10 / 998	625	BB3	25
MAD0083E21	BB83	83 / M8	1,5 - 35	9	160	10 / 15 / 995	1088	BB4	15

Terminal BB holders

Plastic holders BB3 and BB4 are designed for mounting two electrical parts (BB terminals or 3x10 mm busbars) on a DIN rail and offers flexibility in creating a wide range of dimensions. The holders are made of black polyamide.



BB3



BB4

Order code	Type	Color	Dimensions W/H/L (mm)	Weight (g)	Compatible with terminal	Package (pcs)
MAD2003A21	BB3	Black ●	12 / 41,5 / 56	8	BB147, BB142-10 a BB111	50
MAD2004B21	BB4	Black ●	15 / 41,5 / 60	10	BB83	50

MPIN terminals: space-saving solution for adding connection points to RCD's neutral output without a separate neutral bar. Models for 3x16 mm² or 6x16 mm² conductors. Adapters for larger wires with compatible terminal blocks BB111, BB147 (MAD1235E21), and BB142-10 (MAD2235E21).



MPIN 3



MPIN 6



35 mm²



35 mm² HEX

	MAD3016E21	MAD6016E21	MAD1235E21	MAD2235E21
Technical data				
Conductor cross section Cu (mm²)	1,5 – 16	1,5 – 16	1,5 - 35	1,5 - 35
Nominal voltage (V)	690	690	690	690
Nominal current (A)	63	63	63	63
The number of connection points	3x16 mm²	6x16 mm²	2x 1,5 - 35	1x 1,5 - 35
Width / Height / Length (mm)	8 / 16 / 35	16 / 16 / 33	13 / 12 / 27	14 / 21 / 26
Tightening torque (Nm)	2,5	2,5	2,5	4
Weight (g)	10	18	11	23
Package (pcs)	50	50	100	100



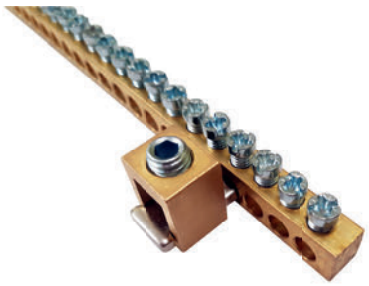



Dimensions

Terminals BB

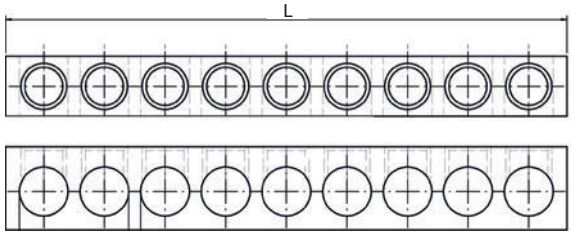

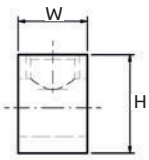

Terminals MPIN

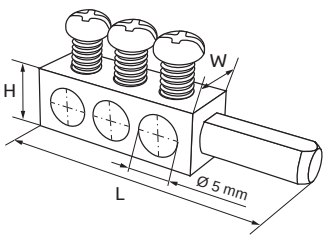

DIN rail mountable bridges made of fire-retardant material. IP00 rated for installation under cover. Available in two color variations.



	N7, PE7	N12, PE12	N15, PE15
Blue	MAD0007N33	MAD0012N33	MAD0015N33
Green	MAD0007G33	MAD0012G33	MAD0015G33

Technical data

Conductor cross section Cu (mm^2)	1,5 - 16	1,5 - 16	1,5 - 16
Nominal voltage (V)	690	690	690
Nominal current (A)	63	63	63
The number of connection points	7	12	15
Tightening torque (Nm)	2,5	2,5	2,5
Width / Height / Length (mm)	23 / 30 / 52	23 / 30 / 85,5	23 / 30 / 104,5
Mounting	DIN rail	DIN rail	DIN rail
Weight (g)	26	41	50
Package (pcs)	10	10	10

Terminals MSET

Ready-to-use solution for time-saving. Brass conductive part, steel connecting parts with Zn galvanization.

Order code	Type	Number of connections	Dimensions (mm) W / H / L	Weight (g)	Package (pcs)
MAD2007B21	MSET 7	7x2	40 / 40 / 50	54	10
MAD2009B21	MSET 9	9x2	40 / 40 / 64	68	10
MAD2014B21	MSET 14	14x2	40 / 40 / 97	96	10
MAD2024B21	MSET 24	24x2	40 / 40 / 163	156	10
MAD2032B21	MSET 32	32x2	40 / 40 / 216	202	10
MAD2042B21	MSET 42	42x2	40 / 40 / 282	258	10
MAD2052B21	MSET 52	52x2	40 / 40 / 348	316	10



Technical data

Conductor cross section Cu (mm^2)	1,5 - 16
Nominal voltage (V)	690
Nominal current (A)	63
Tightening torque (Nm)	2,5
Mounting	DIN rail

Mountable crosswise on DIN rail. Fire-retardant bridges, IP20 protection class. Available in three colors.



A7H, N7H , PE7H

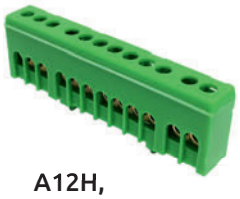

A12H, N12H, PE12H



A15H, N15H, PE15H



A6H-2, N6H-2, PE6H-2

Grey	MAD1007A15	MAD1012A15	MAD1015A15	MAD2006A15
Blue	MAD1007N15	MAD1012N15	MAD1015N15	MAD2006N15
Green	MAD1007G15	MAD1012G15	MAD1015G15	MAD2006G15

Technical data

Conductor cross section Cu (mm^2)	1,5 - 16	1,5 - 16	1,5 - 16	8 x 2,5 - 16 4 x 4 - 25
Nominal voltage (V)	690	690	690	500
Nominal current (A)	63	63	63	63
The number of connection points	7	12	15	2 x 6
Tightening torque (Nm)	2	2	2	2
Width / Height / Length (mm)	13 / 27 / 53	13 / 27 / 87	13 / 27 / 106	30 / 27 / 53
Mounting	DIN rail	DIN rail	DIN rail	DIN rail
Weight (g)	28	45	57	88
Package (pcs)	10	10	10	6

Distribution blocks SLT

1000 V AC/DC

Bimetal (Al/Cu)

Class A

Certified according to standards EN 61238-1 and EN 60947-7-1

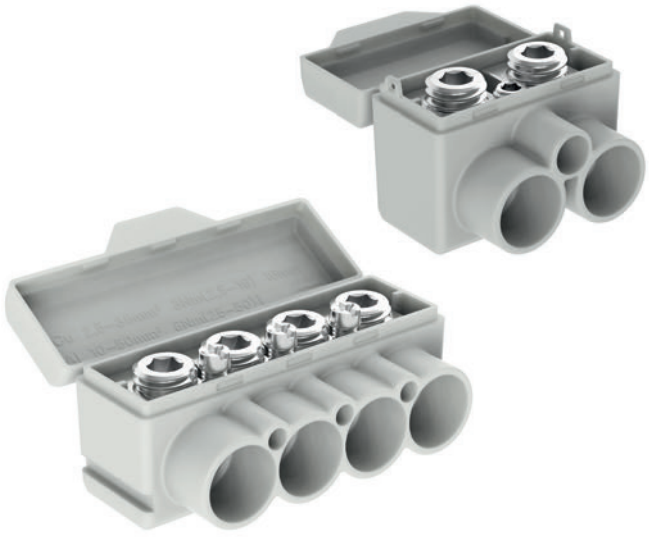

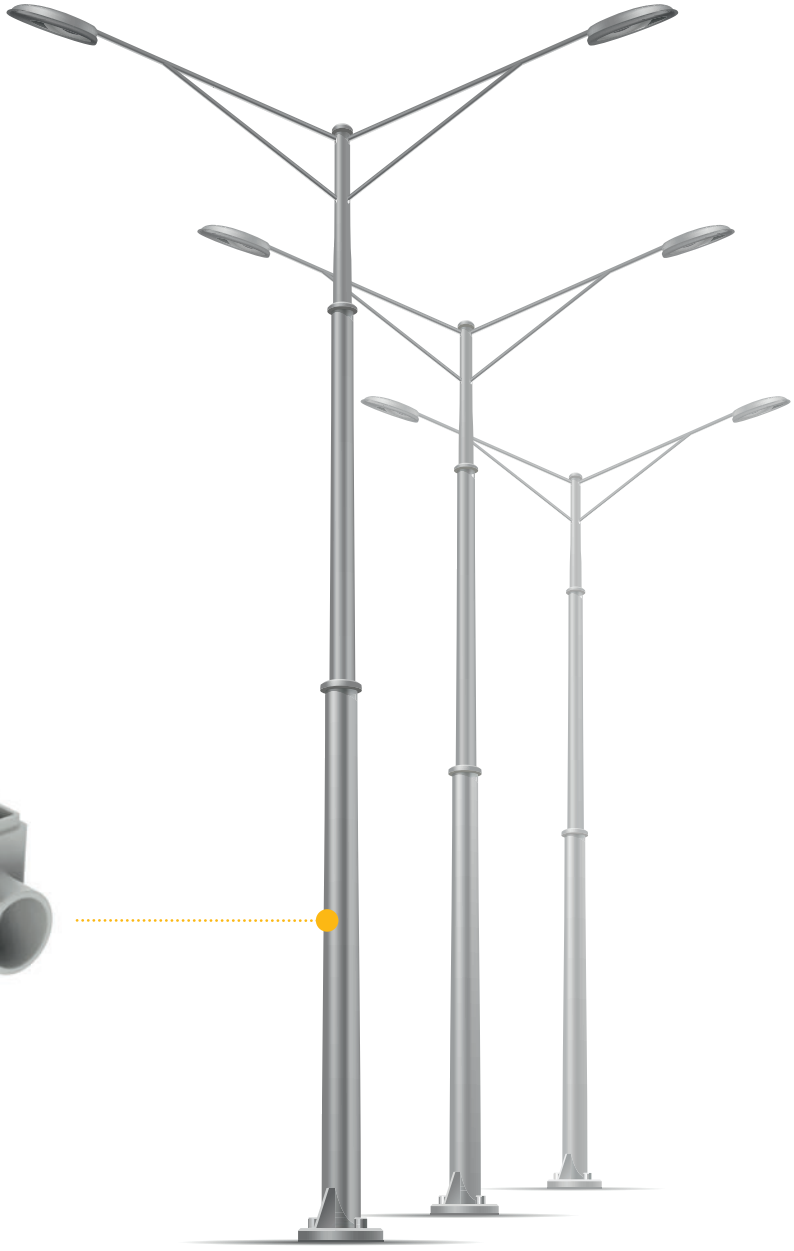

Distribution blocks are designed for copper and aluminium conductors. The blocks are suitable for all types of copper or aluminium conductors with cross-section up to 50 mm² (Al) / 35 mm² (Cu). Multiple copper wires can be placed to the blocks according to the respective terminal type. IP protection class for blocks is IP23.
SLT distribution blocks come in 2-, 4- and 6-terminal sizes, with some models providing additional connection **(1)** points for connecting small conductors (e.g. LED lights).

Distribution blocks are tested and certified class A connectors.
Distribution blocks are tested and certified by following standards:
*** EN 60947-7-1:2009**, *** EN 61238-1:2003**

Distribution blocks are used inside metal poles or in separate boxes. The items are soon available with DIN rails!

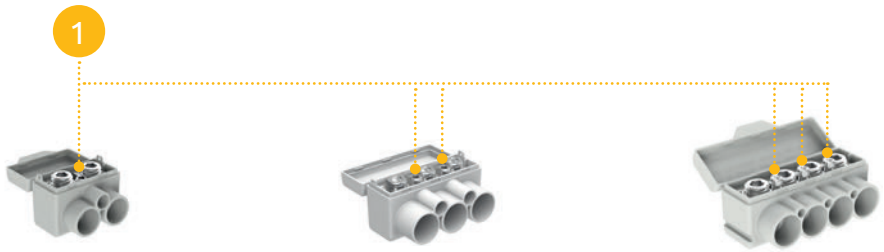

	SLT 50-2-1	SLT 50-3-2	SLT 50-4-3
Grey	MAS2051A10	MAS3051A10	MAS4051A10
Blue	MAS2051B10	MAS3051B10	MAS4051B10
Yellow-green	MAS2051Y10	MAS3051Y10	MAS4051Y10
Technical data			
Conductor cross-section Cu (mm²)	2 x (2,5 - 35) + 1 x 1,5 - 6	3 x (2,5 - 35) + 2 x (1,5 - 6)	4 x (2,5 - 35) + 3 x 2,5
Conductor cross-section Al (mm²)	2 x (16 - 50)	3 x (16 - 50)	4 x (10 - 50)
Nominal voltage (V)	1000	1000	1000
Nominal current Cu / Al (A)	135 / 145	135 / 145	135 / 145
Width / Height / Length (mm)	36 / 27 / 29	55 / 30 / 32	60 / 27 / 29
Screw / hexagonal key (AV)	5 / 3	5 / 3	5
Tightening torque (Nm)	3 Nm (2,5 - 16 mm²) 8 Nm (25 - 50 mm²) 2 Nm (1,5 - 6 mm²)	3 Nm (2,5 - 16 mm²) 8 Nm (25 - 50 mm²) 2 Nm (1,5 - 6 mm²)	3 Nm (2,5 - 16 mm²) 8 Nm (25 - 50 mm²) 1 Nm (1,5 - 2,5 mm²)
Weight (g)	33	49	46
Package (pcs)	18	18	18

Dimensions

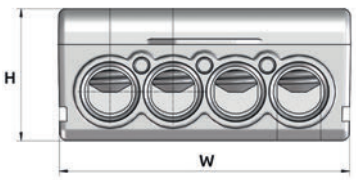

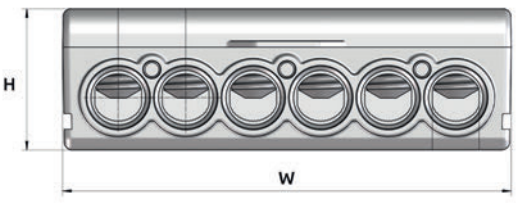

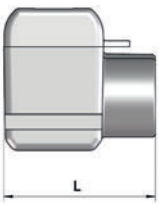





	SLT 50-6-3	SLT 50-4	SLT 50-6
Grey	MAS6051A10	MAS4050A10	MAS6050A10
Blue	MAS6051B10	MAS4050B10	MAS6050B10
Yellow-green	MAS6051Y10	MAS4050Y10	MAS6050Y10
Technical data			
Conductor cross-section Cu (mm^2)	6 x (2,5 - 35) + 3 x 2,5	4 x (2,5 - 35)	6 x (2,5 - 35)
Conductor cross-section Al (mm^2)	6 x (10 - 50)	4 x (10 - 50)	6 x (10 - 50)
Nominal voltage (V)	1000	1000	1000
Nominal current Cu / Al (A)	135 / 145	135 / 145	135 / 145
Width / Height / Length (mm)	86 / 27 / 29	60 / 27 / 29	86 / 27 / 29
Screw / hexagonal key (AV)	5	5	5
Tightening torque (Nm)	3 Nm (2,5 - 16 mm^2) 8 Nm (25 - 50 mm^2) 1 Nm (1,5 - 2,5 mm^2)	3 Nm (2,5 - 16 mm^2) 8 Nm (25 - 50 mm^2)	3 Nm (2,5 - 16 mm^2) 8 Nm (25 - 50 mm^2)
Weight (g)	70	41,8	61,1
Package (pcs)	6	18	6

Dimensions

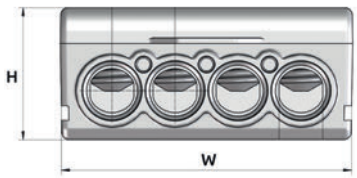

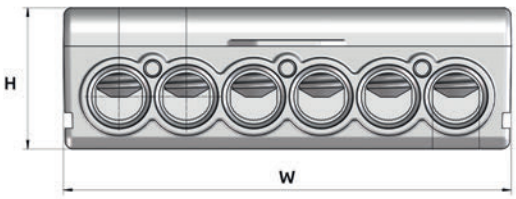

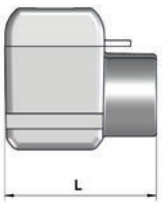

Branching connector sealing kit

	Branching connector sealing kit
Order code	MAS0002A10
Weight (g)	5
Package (pcs)	3



MCB Busbars: fast installation in every length

Save up to 70%
of your installation time.

Prevent
installation mistakes

Max. operating amperage
130 A

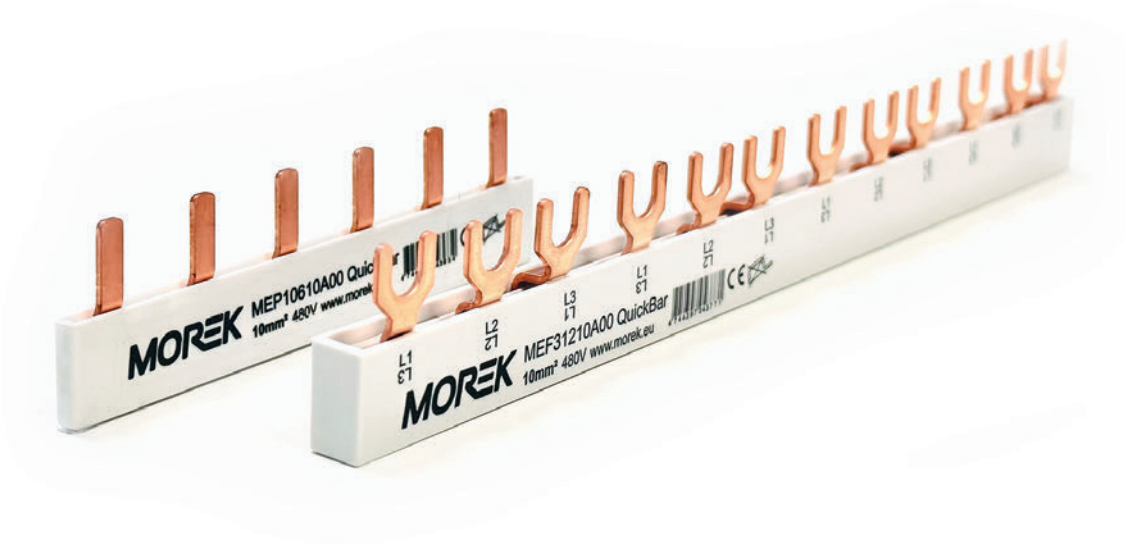

Ready-to-Use QuickBar Busbars

MCB busbars in different standard lenghts for fast installation.

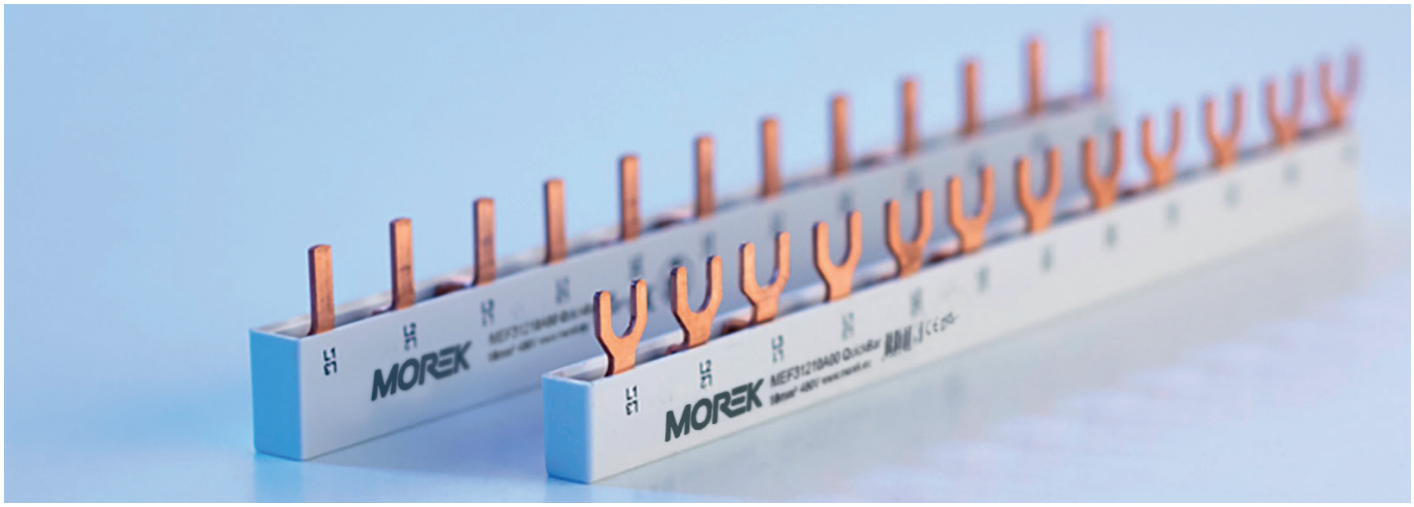

Up to 70% faster installation:
compared to cabling or traditional busbars

Ready-to-use:
MCB busbars in different standard lenghts for fast installation.

Universal compatibility:
suitable for a wide range of circuit breakers.

Safety and reliability:
high-quality insulation and tested electrical performance.

Flexible options:
available in different pole configurations, lengths and cross-sections.

The Morek QuickBar Busbar System is designed to simplify, accelerate and standardize distribution board wiring. Unlike traditional busbars, which require cutting, deburring, cleaning and the installation of end caps, QuickBar busbars come fully prefabricated and ready to install straight out of the box. This eliminates many time-consuming tasks, reduces contamination inside the enclosure and minimizes the risk of wiring errors that may lead to faults or unwanted short circuits.
Thanks to their compact form factor and intelligent modular design, QuickBar busbars deliver the same electrical performance as standard busbars while offering significantly improved installation efficiency.

Properties:

Nominal voltage: 1000V AC/DC

Protection class: IP20

Heat deflection: 90°C flame-retardant

Halogen free

Certified according to standards:
EN 60947-1:2007 / |EC 60947-1:2007
EN 61439-1:2011 / IEC 61439-1:2011

Despite a small selection of Quickbar-Busbars,

many extensions are possible by overlapping the busbars.
Forget the busbars sold by metre. **Ready-to-Use Morek QuickBar Busbars is worth trying!**

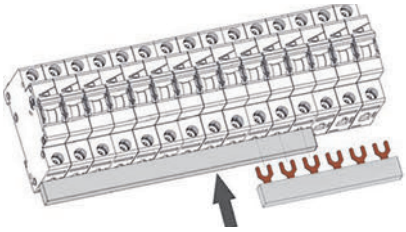

Extensions can be easily made by overlapping the busbars.

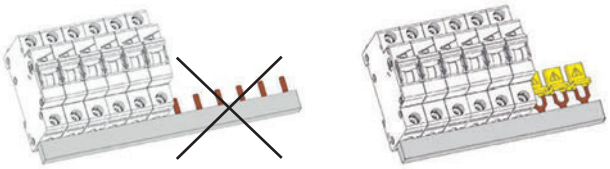

For busbars with fork or pin lugs that are not required, yellow contact protection covers with a voltage warning symbol are available.

Feeding at beginning or end of bar
Max. current Is/Phase 10mm² = 63A / 16mm² = 80A

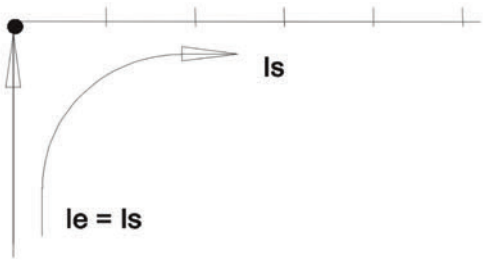

Feeding from the center of the bar
Max. feeding current Ie/Phase 10mm² = 100A / 16mm² = 130A

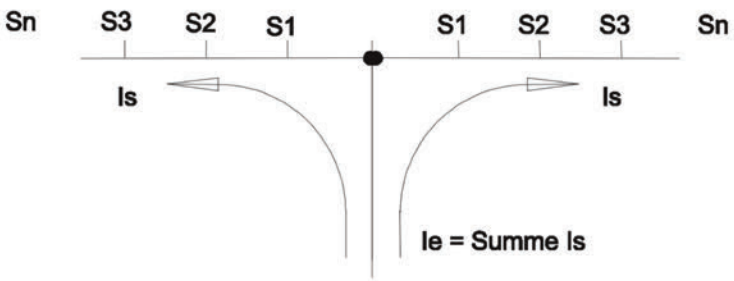

In the case of center feeding, please ensure that the sum of the outgoing currents S1…Sn per rail branch does not exceed the maximum specified busbar current Is per phase.

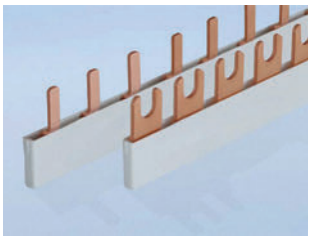

Simple and efficient. One-pole QuickBar busbars are the ideal solution for single-phase applications where speed, clarity and flexibility are essential.

Pitch (L>L):**17,8 mm**
Phase sequence: **L,L,...**

One-pole Fork QuickBar Busbars

Compatibility with: Schneider K60N, Legrand, Eaton, Chint, AEG, ETI, Noark, Hager, Doepke

Order code	No. of poles	Connection type	Cross section	No. of forks	A (mm) Length	B (mm) Full Length	Weight/pcs (kg)	Qty
MEF10610A00	1	fork	10 mm²	6	89	105	0,0260	10
MEF10910A00	1	fork	10 mm²	9	142,4	158	0,0320	10
MEF11210A00	1	fork	10 mm²	12	195,8	211,5	0,0470	10
MEF11510A00	1	fork	10 mm²	15	249,2	267	0,0550	20
MEF11810A00	1	fork	10 mm²	18	302,6	320	0,0660	20
MEF12110A00	1	fork	10 mm²	21	356	374	0,0770	20
MEF10616A00	1	fork	16 mm²	6	89	105	0,0272	10
MEF10916A00	1	fork	16 mm²	9	142,4	158	0,0408	50
MEF11216A00	1	fork	16 mm²	12	195,8	211,5	0,0544	10
MEF11516A00	1	fork	16 mm²	15	249,2	267	0,0680	10

One-pole Pin QuickBar Busbars

Compatibility with: Schneider IC60, ABB (up to 12 pins), Siemens, OEZ

Order code	No. of poles	Connection type	Cross section	No. of pins	A (mm) Length	B (mm) Full Length	Weight/pcs (kg)	Qty
MEP10610A00	1	pin	10 mm²	6	89	105	0,0220	20
MEP10910A00	1	pin	10 mm²	9	142,4	158	0,0330	50
MEP11210A00	1	pin	10 mm²	12	195,8	211,5	0,0440	20
MEP11510A00	1	pin	10 mm²	15	249,2	267	0,0550	10
MEP11810A00	1	pin	10 mm²	18	302,6	320	0,0660	10
MEP12110A00	1	pin	10 mm²	21	356	374	0,0770	10
MEP10616A00	1	pin	16 mm²	6	89	105	0,1112	10
MEP10916A00	1	pin	16 mm²	9	142,4	158	0,1668	10
MEP11216A00	1	pin	16 mm²	12	195,8	211,5	0,2224	10
MEP11516A00	1	pin	16 mm²	15	249,2	267	0,2780	10

Dimensions

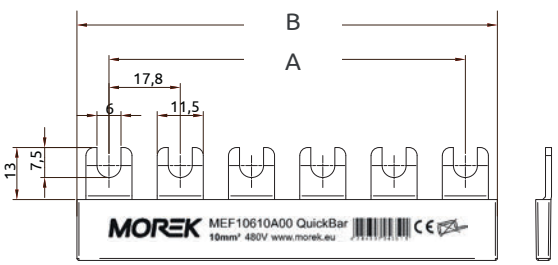

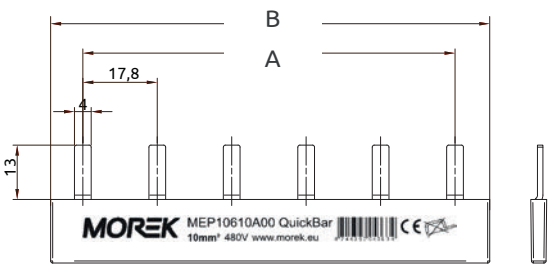

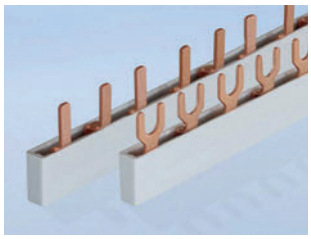

Phase and neutral made easy. Two-pole QuickBar busbars provide a reliable and time-saving solution for L–N or L1–L2 configurations.

Pitch (L>L):**17,8 mm**
Phase sequence: **L1,L2/N,...**

Two-pole Fork QuickBar Busbars

Compatibility with: Schneider K60N, Legrand, Eaton, Chint, AEG, ETI, Noark, Hager, Doepke

Order code	No. of poles	Connection type	Cross section	No. of forks	A (mm) Length	B (mm) Full Length	Weight/pcs (kg)	Qty
MEF20410A00	2	fork	10 mm²	4	53,4	75,5	0,0180	10
MEF20610A00	2	fork	10 mm²	6	89	102	0,0290	10
MEF21210A00	2	fork	10 mm²	12	195,8	210	0,0640	10

Two-pole Pin QuickBar Busbars

Compatibility with: Schneider IC60, ABB (up to 12 pins), Siemens, OEZ

Order code	No. of poles	Connection type	Cross section	No. of pins	A (mm) Length	B (mm) Full Length	Weight/pcs (kg)	Qty
MEP20410A00	2	pin	10 mm²	4	53,4	75,5	0,0170	10
MEP20610A00	2	pin	10 mm²	6	89	102	0,0270	10
MEP21210A00	2	pin	10 mm²	12	195,8	210	0,0560	10

Dimensions

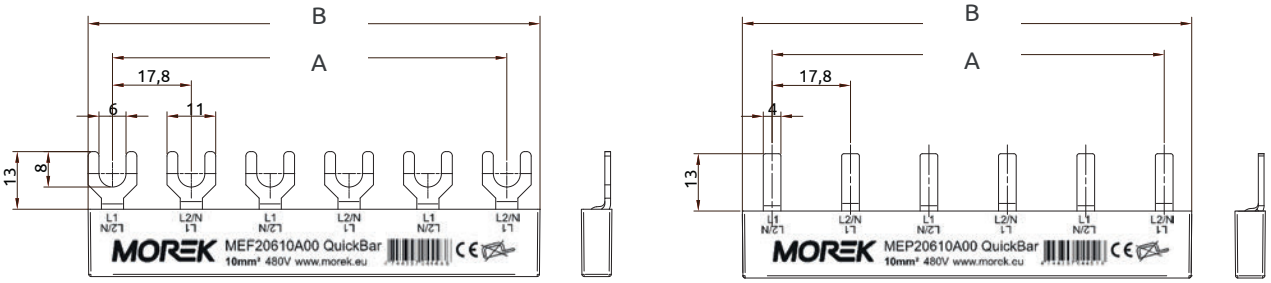

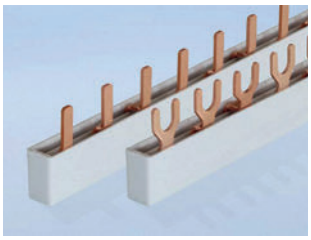

Balanced three-phase distribution. Three-pole QuickBar busbars ensure consistent and balanced three-phase power distribution.

Pitch (L>L):**17,8 mm**
Phase sequence: **L1,L2,L3,...**

Three-pole Fork QuickBar Busbars

Compatibility with: Schneider K60N, Legrand, Eaton, Chint, AEG, ETI, Noark, Hager, Doepke

Order code	No. of poles	Connection type	Cross section	No. of forks	A (mm) Length	B (mm) Full Length	Weight/pcs (kg)	Qty
MEF30610A00	3	fork	10 mm²	6	89	102	0,0340	10
MEF30910A00	3	fork	10 mm²	9	142,4	157,8	0,0590	10
MEF31210A00	3	fork	10 mm²	12	195,8	212	0,0830	10
MEF31510A00	3	fork	10 mm²	15	249,2	267	0,0780	10
MEF30616A00	3	fork	16 mm²	6	89	102	0,0485	10
MEF30916A00	3	fork	16 mm²	9	142,4	157,8	0,0900	10
MEF31216A00	3	fork	16 mm²	12	195,8	212	0,1190	10
MEF31516A00	3	fork	16 mm²	15	249,2	267	0,1560	10

Three-pole Pin QuickBar Busbars

Compatibility with: Schneider IC60, ABB (up to 12 pins), Siemens, OEZ

Order code	No. of poles	Connection type	Cross section	No. of pins	A (mm) Length	B (mm) Full Length	Weight/pcs (kg)	Qty
MEP30610A00	3	pin	10 mm²	6	89	102	0,0320	10
MEP30910A00	3	pin	10 mm²	9	142,4	157,8	0,0550	10
MEP31210A00	3	pin	10 mm²	12	195,8	212	0,0780	10
MEP31510A00	3	pin	10 mm²	15	249,2	267	0,0929	10
MEP30616A00	3	pin	16 mm²	6	89	102	0,0460	10
MEP30916A00	3	pin	16 mm²	9	142,4	157,8	0,0780	10
MEP31216A00	3	pin	16 mm²	12	195,8	212	0,1040	10
MEP31516A00	3	pin	16 mm²	15	249,2	267	0,1300	10

Dimensions

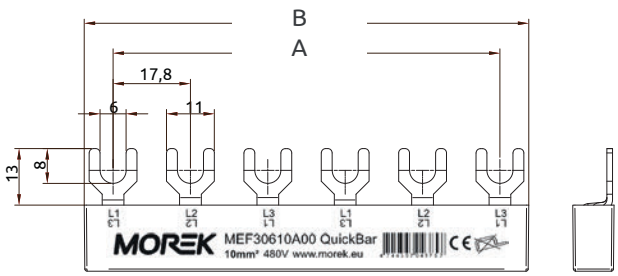

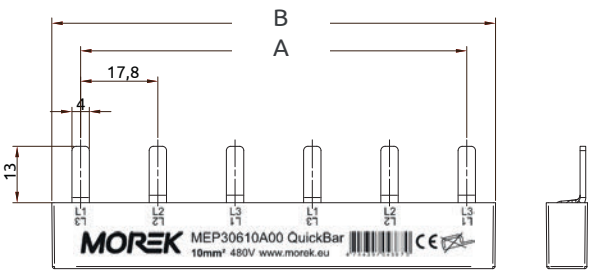

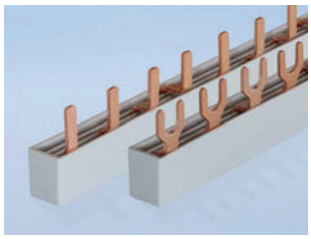

Structured L1-L2-L3-N power distribution. Designed for three-phase installations with neutral conductors, four-pole QuickBar busbars provide consistent pole sequencing and fast, error-free installation.

Pitch (L>L):**17,8 mm**

Four-pole Fork QuickBar Busbars

Compatibility with: Schneider K60N, Legrand, Eaton, Chint, AEG, ETI, Noark, Hager, Doepke

Order code	No. of poles	Connection type	Cross section	No. of forks	Phase sequence	A (mm) Length	B (mm) Full Length	Qty
MEF40810N00	4	fork	10 mm²	8	L1,L2,L3,N,L1,…	124,6	140	10
MEF41210N00	4	fork	10 mm²	12	L1,L2,L3,N,L1,…	195,8	210	10
MEF41210N01	4	fork	10 mm²	12	L1,N,L2,N,L3,N,L1,…	195,8	210	10
MEF41610N01	4	fork	10 mm²	16	L1,N,L2,N,L3,N,L1,…	267	285	10
MEF40816N00	4	fork	16 mm²	8	L1,L2,L3,N,L1,…	124,6	140	10
MEF41216N00	4	fork	16 mm²	12	L1,L2,L3,N,L1,…	195,8	210	10
MEF41616N00	4	fork	16 mm²	16	L1,L2,L3,N,L1,…	267	285	10
MEF41216N01	4	fork	16 mm²	12	L1,N,L2,N,L3,N,L1,…	195,8	210	10
MEF41616N01	4	fork	16 mm²	16	L1,N,L2,N,L3,N,L1,…	267	285	10

Four-pole Pin QuickBar Busbars

Compatibility with: Schneider IC60, ABB (up to 12 pins), Siemens, OEZ

Order code	No. of poles	Connection type	Cross section	No. of pins	Phase sequence	A (mm) Length	B (mm) Full Length	Qty
MEP40810N00	4	pin	10 mm²	8	L1,L2,L3,N,L1,…	124,6	140	10
MEP41210N00	4	pin	10 mm²	12	L1,L2,L3,N,L1,…	195,8	210	10
MEP41210N01	4	pin	10 mm²	12	L1,N,L2,N,L3,N,L1,…	195,8	210	10
MEP41610N01	4	pin	10 mm²	16	L1,N,L2,N,L3,N,L1,…	267	285	10
MEP40816N00	4	pin	16 mm²	8	L1,L2,L3,N,L1,…	124,6	140	10
MEP41216N00	4	pin	16 mm²	12	L1,L2,L3,N,L1,…	195,8	210	10
MEP41616N00	4	pin	16 mm²	16	L1,L2,L3,N,L1,…	267	285	10
MEP41216N01	4	pin	16 mm²	12	L1,N,L2,N,L3,N,L1,…	195,8	210	10
MEP41616N01	4	pin	16 mm²	16	L1,N,L2,N,L3,N,L1,…	267	285	10

Dimensions

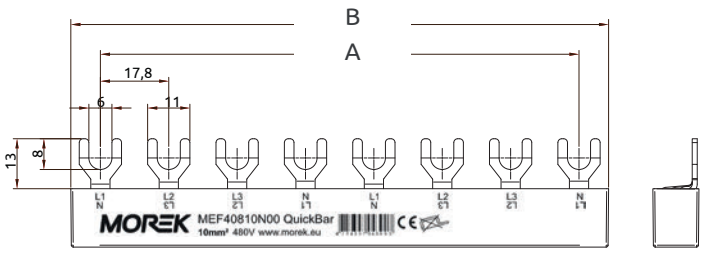

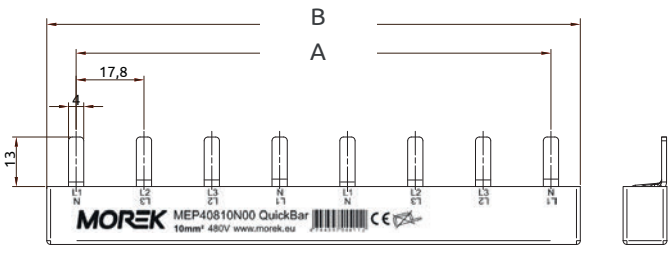

MCB 1 m Cuttable Busbars for Flexible Installation

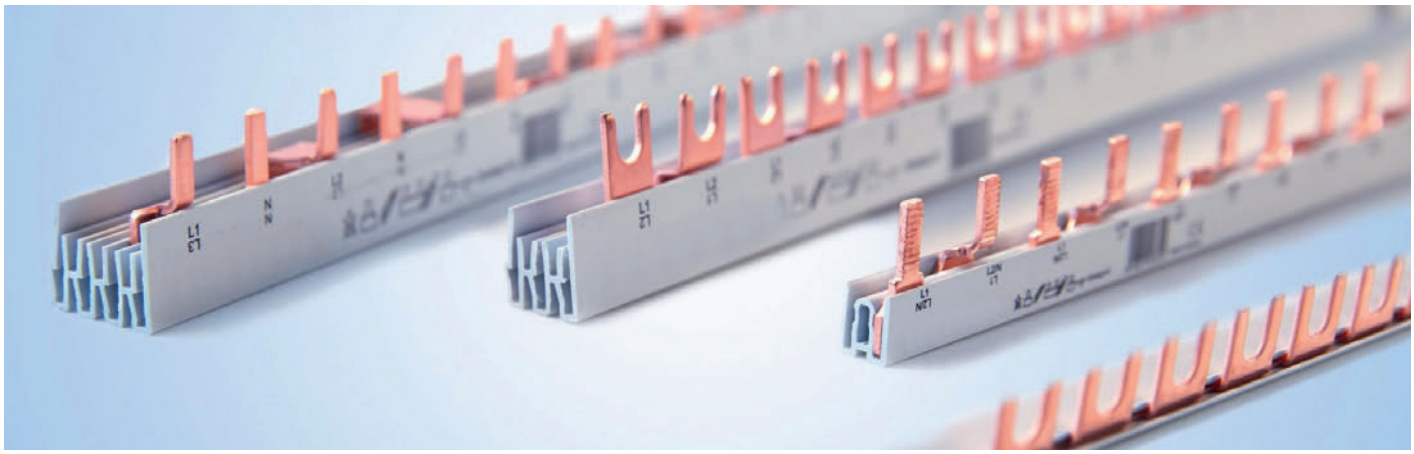

The busbars are supplied in **standard 1-meter lengths** and can be cut to the required number of modules to fit specific panel configurations, ensuring no compromise on electrical performance or mechanical stability.

The system accommodates both fork and pin connection types and is compatible with miniature circuit breakers (MCBs) from leading manufacturers. Its design guarantees secure contact, uniform current distribution, and compliance with relevant installation standards.

Properties:

Nominal voltage: 1000V AC/DC

Max operating voltage:
1Ph:1000V AC/DC
2Ph-4Ph: 480V AC/DC

Protection class: IP20

Heat deflection: 90°C flame-retardant

Halogen free

Certified according to standards:
EN 60947-1:2007 / |EC 60947-1:2007
EN 61439-1:2011 / IEC 61439-1:2011

Technical Features

Standard length: 1 m (cuttable to size)

Connection types: Fork and pin

Pole configurations:
- One-pole
- Two-pole
- Multi-pole (depending on version)

Cross sections:
- 10 mm²
- 16 mm²

Pitch: 17.8 mm (standard module spacing)

Protection: IP20 when end caps are fitted

Material: Copper conductor with insulated housing

Mounting position: Under MCB terminals

These MCB busbars are specifically designed for ABB MCB systems, ensuring correct pitch, secure contact and seamless integration. A reliable solution for ABB-based distribution boards where precision matters.

One-pole Pin 1m MCB Busbars for ABB

Order code	No. of poles	Cross section	No. of modules	Connection type	Pitch	Pole sequence	Endcap
MEP11210A02	1	10 mm²	56	pin	17,6 mm	L,L,L,...	A11

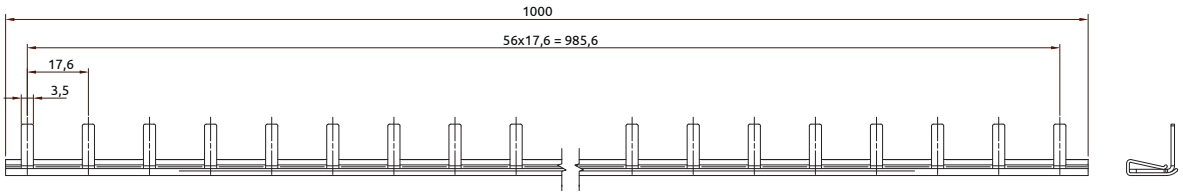

Three-pole Pin 1m MCB Busbars for ABB

Order code	No. of poles	Cross section	No. of modules	Connection type	Pitch	Pole sequence	Endcap
MEP35710A02	3	10 mm²	57	pin	17,6 mm	L1,L2,L3,...	A1

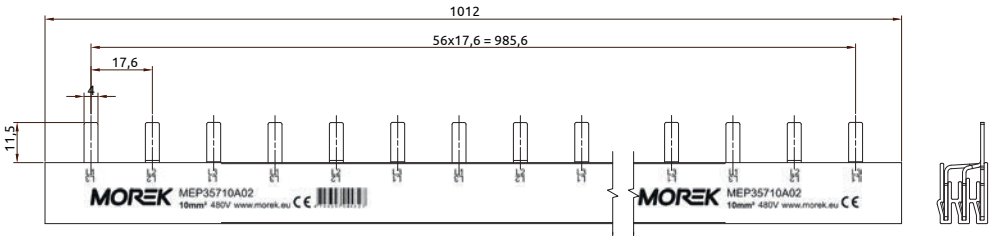

Four-pole Pin 1m MCB Busbars for ABB

Order code	No. of poles	Cross section	No. of modules	Connection type	Pitch	Pole sequence	Endcap
MEP45610N02	4	10 mm²	56	pin	17,6 mm	L1,L2,L3,N,L1,…	A2
MEP45410N02	4	10 mm²	54	pin	7,6 mm	L1,N,L2,N,L3,N…	A2

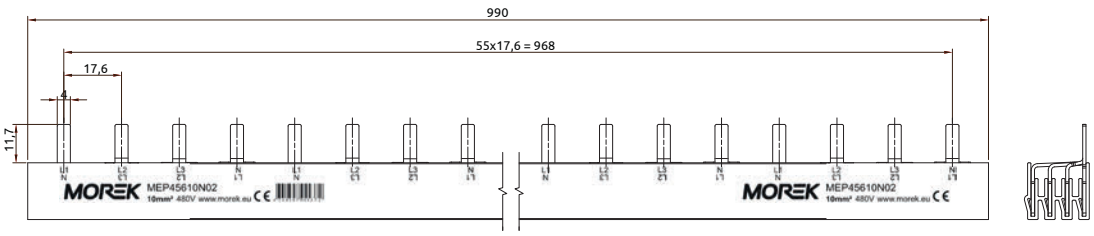

MCB busbars come in 1 m lengths and can be cut to the required size for flexible installation. With end caps attached, they offer a safe, IP20-rated solution for individual applications

One-pole Fork 1m MCB Busbars

Compatibility with: Schneider K60N, Legrand, Eaton, Chint, AEG, ETI, Noark, Hager, Doepke

Order code	No. of poles	Cross section	No. of modules	Connection type	Pitch	Pole sequence	Endcap
MEF15710A00	1	10 mm²	57	fork	17,8 mm	L,L,L,...	A11
MEF15716A00	1	16 mm²	57	fork	17,8 mm	L,L,L,...	A11

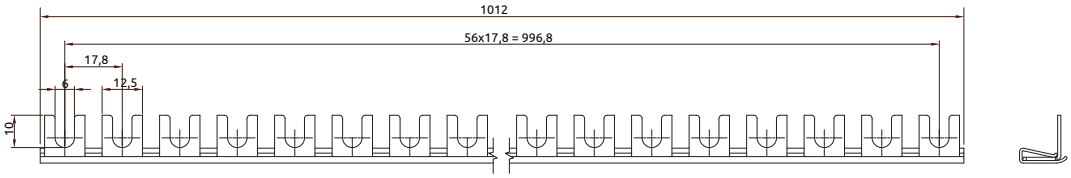

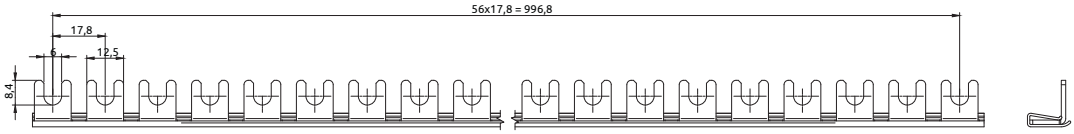

One-pole Pin 1m MCB Busbars

Compatibility with: Schneider IC60, Siemens, OEZ

Order code	No. of poles	Cross section	No. of modules	Connection type	Pitch	Pole sequence	Endcap
MEP15710A00	1	10 mm²	57	pin	17,8 mm	L,L,L,...	A11
MEP15716A00	1	16 mm²	57	pin	17,8 mm	L,L,L,...	A11

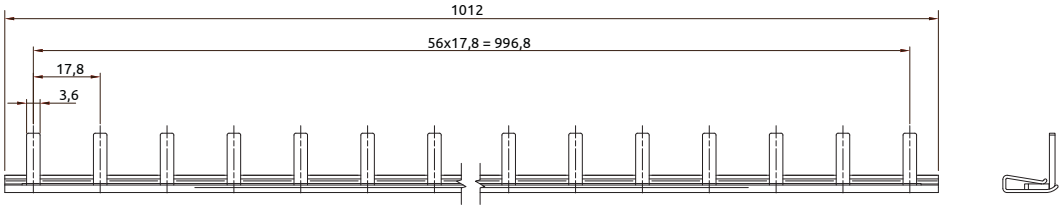

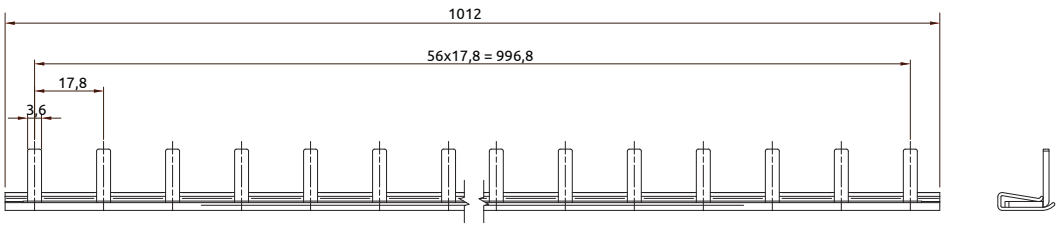

1 m one- and two-pole busbars provide the same QuickBar advantages with added flexibility. Cut only what you need and keep installation efficient.

Two-pole Fork 1m MCB Busbars

Compatibility with: Schneider K60N, Legrand, Eaton, Chint, AEG, ETI, Noark, Hager, Doepke

Order code	No. of poles	Cross section	No. of modules	Connection type	Pitch	Pole sequence	Endcap
MEF25610A00	2	10 mm²	56	fork	17,8 mm	L1,L2/N,…	A3
MEF25616A00	2	16 mm²	56	fork	17,8 mm	L1,L2/N,…	A3

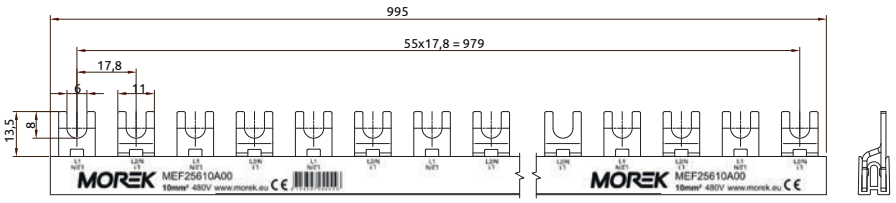

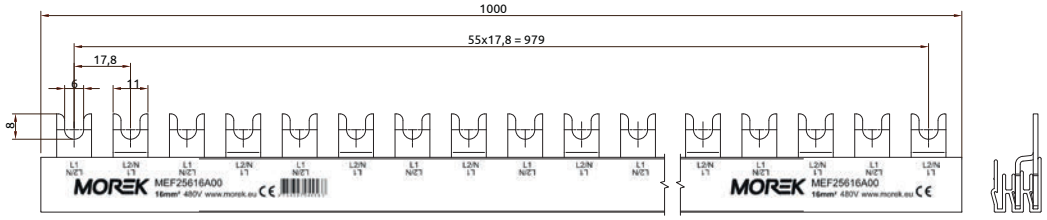

Two-pole Pin 1m MCB Busbars

Compatibility with: Schneider IC60, Siemens, OEZ

Order code	No. of poles	Cross section	No. of modules	Connection type	Pitch	Pole sequence	Endcap
MEP25610A00	2	10 mm²	56	pin	17,8 mm	L1,L2/N,…	A3
MEP25616A00	2	16 mm²	56	pin	17,8 mm	L1,L2/N,…	A3

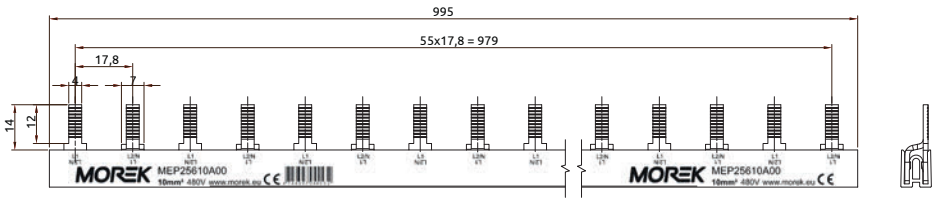

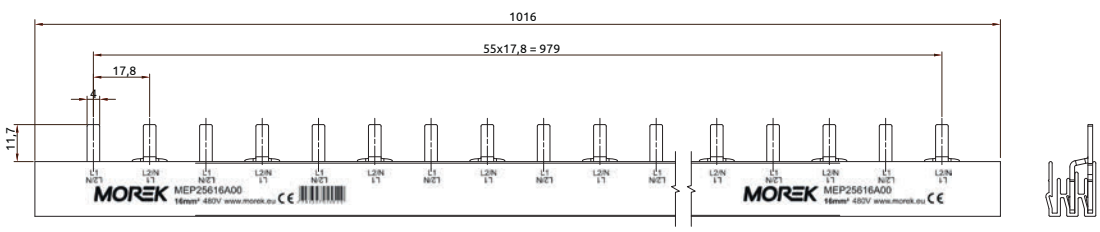

Flexible Three-Phase Distribution. 1 m three-pole busbars are designed for flexible three-phase installations where custom length is required.

Three-pole Fork 1m MCB Busbars.

Compatibility with: Schneider K60N, Legrand, Eaton, Chint, AEG, ETI, Noark, Hager, Doepke

Order code	No. of poles	Cross section	No. of modules	Connection type	Pitch	Pole sequence	Endcap
MEF35710A00	3	10 mm²	57	fork	17,8 mm	L1, L2, L3,...	A4
MEF35716A00	3	16 mm²	57	fork	17,8 mm	L1, L2, L3,...	A4

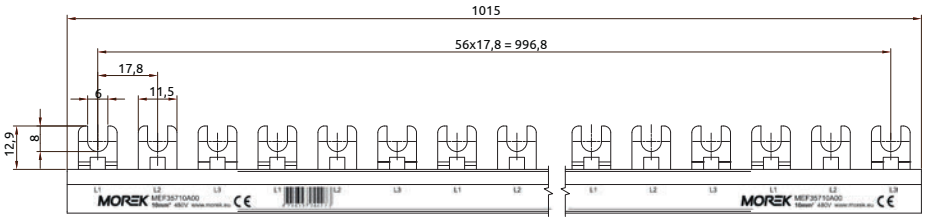

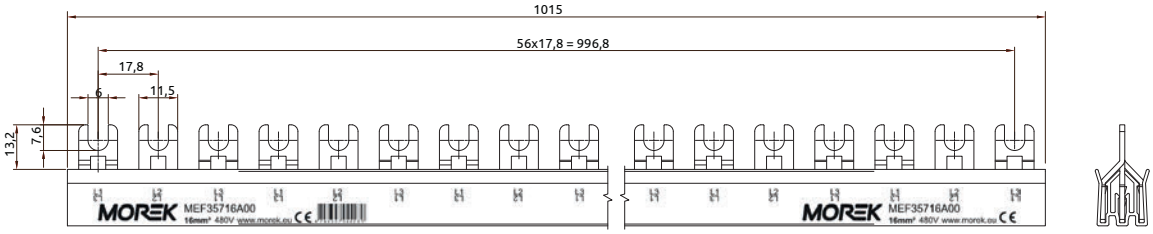

Three-pole Pin 1m MCB Busbars.

Compatibility with: Schneider IC60, Siemens, OEZ

Order code	No. of poles	Cross section	No. of modules	Connection type	Pitch	Pole sequence	Endcap
MEP35710A00	3	10 mm²	57	pin	17,8 mm	L1, L2, L3,...	A1
MEP35716A00	3	16 mm²	57	pin	17,8 mm	L1, L2, L3,...	A1

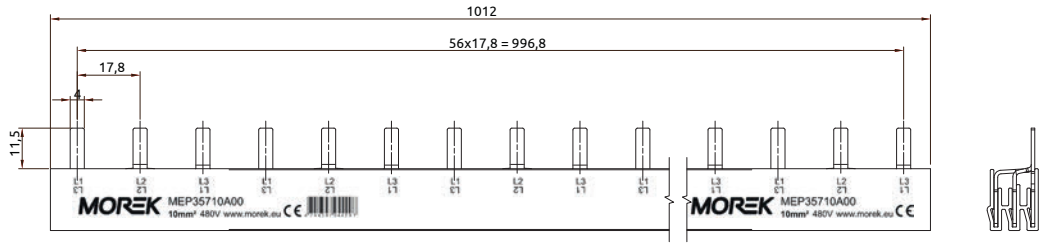

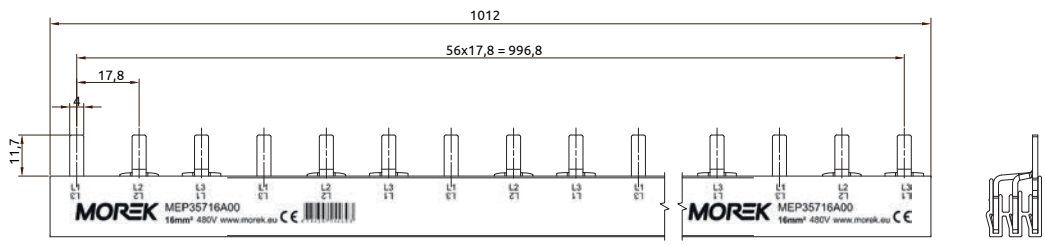

Custom-Length L1–L2–L3–N Distribution. Cut-to-length design, predefined pole sequence and secure connections ensure safe, efficient and error-free installation in complex distribution boards.

Four-pole Fork 1m MCB Busbars

Compatibility with: Schneider K60N, Legrand, Eaton, Chint, AEG, ETI, Noark, Hager, Doepke

Order code	No. of poles	Cross section	No. of modules	Connection type	Pitch	Pole sequence	Endcap
MEF45610N00	4	10 mm²	56	fork	17,8 mm	L1,L2,L3,N,L1,…	A2
MEF45410N01	4	10 mm²	54	fork	17,8 mm	L1,N,L2,N,L3,N,L1,…	A2

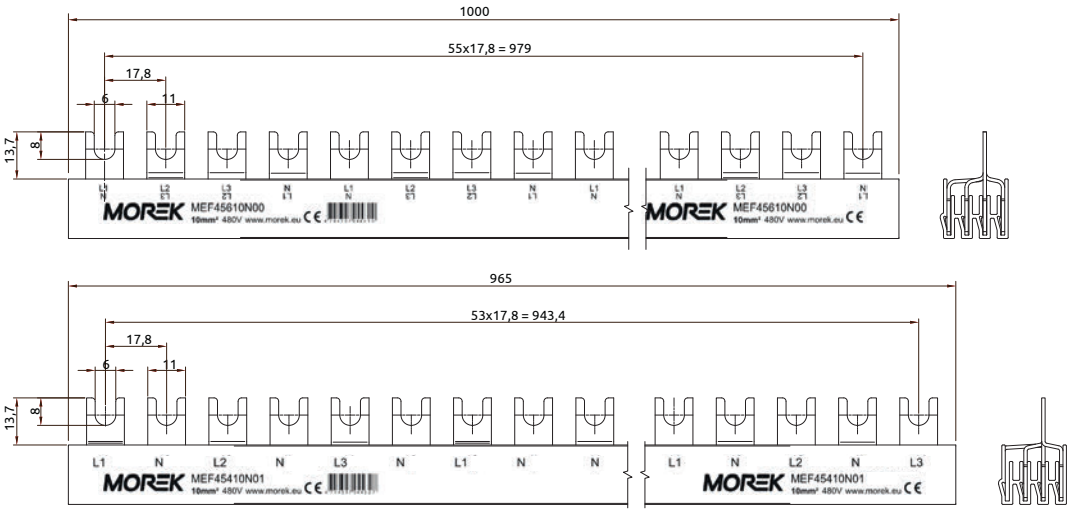

Four-pole Pin 1m MCB Busbars

Compatibility with: Schneider IC60, Siemens, OEZ

Order code	No. of poles	Cross section	No. of modules	Connection type	Pitch	Pole sequence	Endcap
MEP45610N00	4	10 mm²	56	pin	17,8 mm	L1,L2,L3,N,L1,…	A3
MEP45410N01	4	10 mm²	54	pin	17,8 mm	L1,N,L2,N,L3,N,L1,…	A3

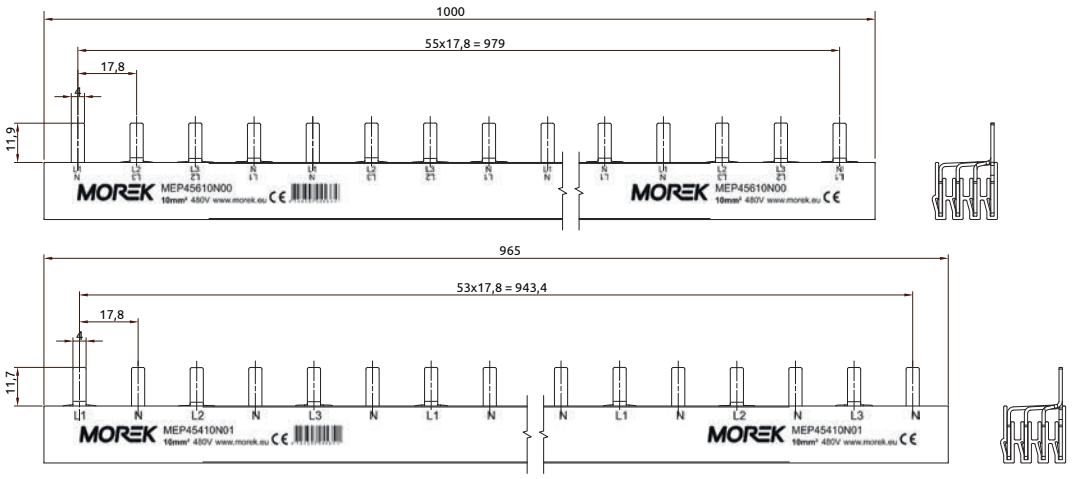

Morek Busbar accessories complete MCB busbar installations by improving safety, flexibility, and panel finishing. Designed for professional low-voltage distribution boards, they ensure clean layouts and compliant installations.

Morek MCB Busbar accessories ensure safe, compliant, and professional busbar systems — the perfect finishing solution for modern distribution boards.

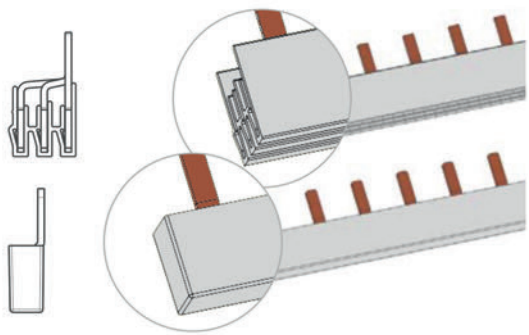

End Caps

Insulate and protect unused busbar ends to prevent accidental contact and ensure a clean finish.

- Versions for **1P, 2P, 3P (L & T), and 4P**
- For **1 m cuttable MCB busbars**
- Easy snap-on installation

Contact Protection Covers

Protect unused fork or pin connections and improve safety during installation and maintenance.

- Insulated protection
- Voltage warning symbols
- Clean, professional appearance

Feed-in Terminals

Enable secure and flexible power supply connections to MCB busbars.

- Fork and pin versions
- **6–50 mm²** conductor range







	A11 Endcap for 1P Busbars	A3 Endcap for 2P Busbars	A1 Endcap for 3P L shape busbars	A4 Endcap for 3P T shape busbars	A2 Endcap for 4P
	MEA10020A00	MEA20016A00	MEA30016A00	MEA30016A01	MEA40016A00
Package 1 qty	50	50	50	50	50
Compability	1m MCB busbars				





	Contact protection cover	Feed-in terminal 6-50mm² Fork	Feed-in terminal 6-50mm² Pin
	MEA00005A00	MEA06050A00	MEA06050A01
Package 1 qty	50	25	25
Compability	MCB Quickbars 1m MCB busbars		

Dimensions

Contact protection cover

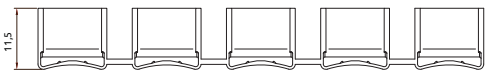

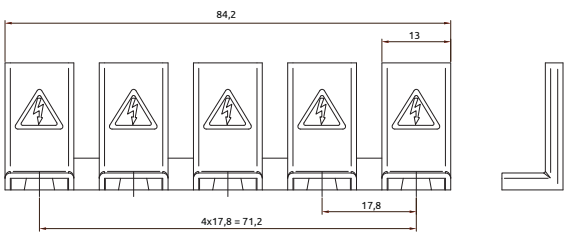

Insulators

Low voltage insulators

Wide range of
polyester
and
polyamide
insulators

High resistance to electrical and mechanical stress



Protective ring against pulling out or twisting of the threaded steel part even under high stress



Polyester resin with 20% fiberglass
Zinc-plated steel - threaded inserts.

Advantages

- Excellent insulation properties
- Easy fixing thanks to hexagonal perimeter
- Application flexibility with models of different size (height and width)
- High resistance to corrosion, high temperatures and electrical / mechanical stress

Technical specifications

- Color red (RAL 3002)
- Operating temperature - 40 °C / + 130 °C
- Self-extinguishing grade UL94 - V0
- Arc resistance > 180 sec. (according to ASTM D-495)

Products displayed here contain only selection of the range offered. Ask for availability of other dimensions and brass inserts from us!



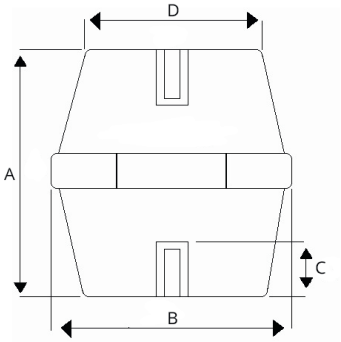

	Dimensions (mm)					Mechanical characteristics				Electrical characteristics			Package
Order code	A	B	C	D	Thread	T.S. (daN)	C.S. (daN)	B.S. (daN)	Tightening torque (Nm)	Rated voltage at 50Hz for 60 sec. (kV)	Flashover voltage (kV AC)	Operating Voltage DC/AC (V)	(pcs)
MID2505H19	25	HEX 19	8	15	M5	400	2300	220	6	8	25	600	50
MID2506H19	25	HEX 19	8	15	M6	400	2300	220	10,3	8	25	600	50
MID3006H30	30	HEX 30	9	26	M6	900	4900	450	10,3	10	30	750	50
MID3008H30	30	HEX 30	9	26	M8	900	4900	450	25,5	10	30	750	50
MID3506H32	35	HEX 32	11	28	M6	1100	7000	500	10,3	10	40	750	50
MID3508H32	35	HEX 32	11	28	M8	1100	7000	500	25,5	10	40	750	50
MID3510H32	35	HEX 32	11	28	M10	1100	7000	500	50	10	40	750	50
MID3606H41	36	HEX 41	11	33	M6	1400	8300	650	10,3	12	40	1000	50
MID3608H41	36	HEX 41	11	33	M8	1400	8300	650	25,5	12	40	1000	25
MID3610H41	36	HEX 41	11	33	M10	1400	8300	650	50	12	40	1000	25
MID4006H32	40	HEX 32	11	28	M6	1100	7000	500	10,3	12	40	1000	50
MID4008H32	40	HEX 32	11	28	M8	1100	7000	500	25,5	12	40	1000	50
MID4010H32	40	HEX 32	11	28	M10	1100	7000	500	50	12	40	1000	50
MID4012H32	40	HEX 32	11	28	M12	1100	7000	500	87,2	12	40	1000	50
MID4006H46	40	HEX 46	15	40	M6	1300	8300	700	10,3	12	40	1000	20
MID4008H46	40	HEX 46	15	40	M8	1300	8300	700	25,5	12	40	1000	20
MID4010H46	40	HEX 46	15	40	M10	1300	8300	700	50	12	40	1000	20
MID4506H36	45	HEX 36	15	29	M6	1300	8500	740	10,3	15	40	1000	25
MID4508H36	45	HEX 36	15	29	M8	1300	8500	740	25,5	15	40	1000	25
MID4510H36	45	HEX 36	15	29	M10	1300	8500	740	50	15	40	1000	25
MID4512H36	45	HEX 36	15	29	M12	1300	8500	740	87,2	15	40	1000	25
MID4506O41	45	OCT 41	15	33	M6	1400	8500	740	10,3	15	40	1000	25
MID4508O41	45	OCT 41	15	33	M8	1400	8500	740	25,5	15	40	1000	25
MID4510O41	45	OCT 41	15	33	M10	1400	8500	740	50	15	40	1000	25
MID4512O41	45	OCT 41	15	33	M12	1400	8500	740	87,2	15	40	1000	25
MID4506H46	45	HEX 46	15	40	M6	1500	9000	750	10,3	15	40	1000	20
MID4508H46	45	HEX 46	15	40	M8	1500	9000	750	25,5	15	40	1000	20

T.S. - Tensile strength I C.S. - Compression strength I B.S. - Bending strength

	Dimensions (mm)					Mechanical characteristics				Electrical characteristics			Package
Order code	**A**	**B**	**C**	**D**	**Thread**	**T.S. (daN)**	**C.S. (daN)**	**B.S. (daN)**	**Tightening torque (Nm)**	**Rated voltage at 50Hz for 60 sec. (kV)**	**Flashover voltage (kV AC)**	**Operating Voltage DC/AC (V)**	**(pcs)**
MID4510H46	45	HEX 46	15	40	M10	1500	9000	750	50	15	40	1000	20
MID5006H36	50	HEX 36	15	29	M6	1300	8000	650	10,3	20	50	1500	25
MID5008H36	50	HEX 36	15	29	M8	1300	8000	650	25,5	20	50	1500	25
MID5010H36	50	HEX 36	15	29	M10	1300	8000	650	50	20	50	1500	25
MID5012H36	50	HEX 36	15	29	M12	1300	8000	650	87,2	20	50	1500	25
MID5012H50	50	HEX 50	15	42	M12	1500	9500	750	87,2	20	50	1500	20
MID6008O55	60	OCT 55	15	43	M8	9000	12500	800	25,5	20	50	1500	10
MID6010O55	60	OCT 55	15	43	M10	12000	12500	800	50	20	50	1500	10
MID6308H41	63	HEX 41	15	33	M8	1600	9000	700	25,5	20	50	1500	20
MID6310H41	63	HEX 41	15	33	M10	1600	9000	700	30	20	50	1500	20
MID6312H41	63	HEX 41	15	33	M12	1600	9000	700	87,2	20	50	1500	20
MID7010H65	70	HEX 65	25	49	M10	3000	15000	1200	50	25	50	2000	5
MID7012H65	70	HEX 65	25	49	M12	3000	15000	1200	87,2	25	50	2000	5
MID7016H65	70	HEX 65	25	49	M16	3000	15000	1200	210,8	25	50	2000	5
MID7512O65	75	OCT 65	26	51	M12	3000	15000	1200	87,2	25	50	2000	5
MID7508H50	75	HEX 50	25	42	M8	1800	9500	730	25,5	25	50	1500	10
MID7510H50	75	HEX 50	25	42	M10	1800	9500	730	50	25	50	1500	10
MID7512H50	75	HEX 50	25	42	M12	1800	9500	730	87,2	25	50	1500	10
MID8012H65	80	HEX 65	25	49	M12	3000	15000	1200	87,2	25	50	2000	5
MID10020O65	100	OCT 65	25	51	M12	4000	16500	1300	87,2	30	50	3600	5
MID10060O65	100	OCT 65	25	51	M16	4000	16500	1300	210,8	30	50	3600	5

T.S. - Tensile strength I C.S. - Compression strength I B.S. - Bending strength

Dimensions

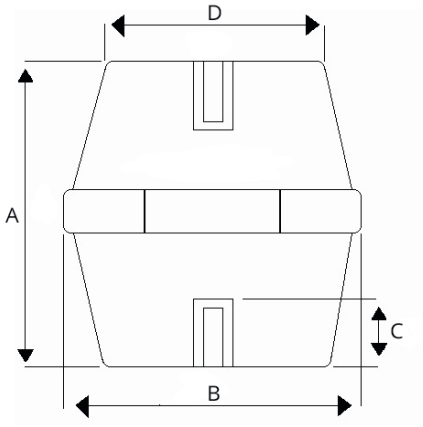

Polyamide resin with 30% fiberglass
Zinc-plated steel - threaded inserts.

Advantages

- Excellent insulation properties
- Easy fixing thanks to hexagonal perimeter
- Application flexibility with models of different size (height and width)
- High resistance to corrosion, high temperatures and electrical / mechanical stress

Technical specifications

- Color red (RAL 3011)
- Operating temperature - 40 °C / + 120 °C
- Self-extinguishing grade UL94 - V0
- Arc resistance > 180 sec. (according to ASTM D-495)

Products displayed here contain only selection of the range offered. Ask for availability of other dimensions and brass inserts from us!



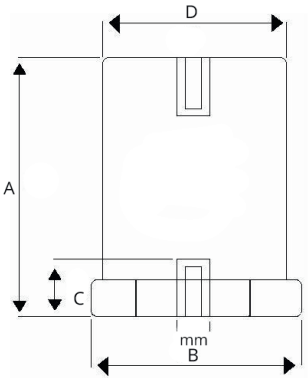

	Dimensions (mm)				Mechanical characteristics				Electrical characteristics			Package
Order code	A	B	C	Thread	T.S. (daN)	C.S. (daN)	B.S. (daN)	Tightening torque (Nm)	Rated voltage at 50Hz for 60 sec. (kV)	Flashover voltage (kV AC)	Operating Voltage DC/AC (V)	(pcs)
Polyamide stud insulators D=20												
MIB1604D20	16	HEX 20	4,5	M4	300	2500	200	3	3	10	400	50
MIB1605D20	16	HEX 20	4,5	M5	300	2500	200	3,5	3	10	400	50
MIB1606D20	16	HEX 20	4,5	M6	300	2500	200	4	3	10	400	50
MIB2005D20	20	HEX 20	5	M5	300	2500	180	3,5	3,5	12	600	50
MIB2006D20	20	HEX 20	5	M6	300	2500	180	4	3,5	12	600	100
MIB2505D20	25	HEX 20	8	M5	300	2500	180	6	5	15	600	50
MIB2506D20	25	HEX 20	8	M6	300	2500	180	10,3	5	15	600	100
MIB2508D20	25	HEX 20	8	M8	300	2500	180	25,5	5	15	600	100
MIB3005D20	30	HEX 20	9	M5	350	2500	150	6	10	20	600	50
MIB3006D20	30	HEX 20	9	M6	350	2500	150	10,3	10	20	600	100
MIB3008D20	30	HEX 20	9	M8	350	2500	150	25,5	10	20	600	100
MIB3505D20	35	HEX 20	9	M5	350	2500	150	6	10	20	600	100
MIB3506D20	35	HEX 20	9	M6	350	2500	150	10,3	10	20	600	100
MIB3508D20	35	HEX 20	9	M8	350	2500	150	25,5	10	20	600	100
MIB4005D20	40	HEX 20	9	M5	350	2500	150	6	10	20	600	50
MIB4006D20	40	HEX 20	9	M6	350	2500	150	10,3	10	20	600	100
MIB4008D20	40	HEX 20	9	M8	350	2500	150	25,5	10	20	600	100
MIB4505D20	45	HEX 20	9	M5	350	2500	150	6	10	20	600	50
MIB4506D20	45	HEX 20	9	M6	350	2500	150	10,3	10	20	600	100
MIB4508D20	45	HEX 20	9	M8	350	2500	150	25,5	10	20	600	50
MIB5005D20	50	HEX 20	9	M5	350	2500	100	6	10	30	750	50
MIB5006D20	50	HEX 20	9	M6	350	2500	100	10,3	10	30	750	50

T.S. - Tensile strength I C.S. - Compression strength I B.S. - Bending strength

	Dimentions (mm)				Mechanical characteristics				Electrical characteristics			Package
Order code	A	B	C	Thread	T.S. (daN)	C.S. (daN)	B.S. (daN)	Tightening torque (Nm)	Rated voltage at 50Hz for 60 sec. (kV)	Flashover voltage kV AC	Operating Voltage DC/AC (V)	(pcs)
Polyamide stud insulators D=30												
MIB3006D30	30	HEX 30	9	M6	900	4500	450	10,3	8	25	750	50
MIB3008D30	30	HEX 30	9	M8	900	4500	450	25,5	8	25	750	50
MIB3506D30	35	HEX 30	11	M6	900	4500	450	10,3	8	25	750	50
MIB3508D30	35	HEX 30	11	M8	900	4500	450	25,5	8	25	750	50
MIB4006D30	40	HEX 30	11	M6	900	4500	450	10,3	10	30	1000	50
MIB4008D30	40	HEX 30	11	M8	900	4500	450	25,5	10	30	1000	50
MIB4506D30	45	HEX 30	15	M6	900	4500	300	10,3	10	30	1000	50
MIB4508D30	45	HEX 30	15	M8	900	4500	300	25,5	10	30	1000	25
MIB5506D30	55	HEX 30	15	M6	900	4500	200	10,3	15	50	1500	25
MIB5508D30	55	HEX 30	15	M8	900	4500	200	25,5	15	50	1500	25
MIB6506D30	65	HEX 30	15	M6	900	4500	150	10,3	15	50	1500	25
MIB6508D30	65	HEX 30	15	M8	900	4500	150	25,5	15	50	1500	25
MIB7006D30	70	HEX 30	15	M6	900	4500	150	10,3	15	50	1500	25
MIB7008D30	70	HEX 30	15	M8	900	4500	150	25,5	15	50	1500	25
Polyamide stud insulators D=40												
MIB3008D40	30	HEX 41	9	M8	1200	6500	700	25,5	8	25	750	50
MIB3508D40	35	HEX 41	11	M8	1200	6500	700	25,5	8	25	750	50
MIB4008D40	40	HEX 41	11	M8	1200	6500	600	25,5	10	30	1000	25
MIB4010D40	40	HEX 41	11	M10	1200	6500	600	50	10	30	1000	25
MIB4508D40	45	HEX 41	15	M8	1200	6500	600	25,5	10	30	1000	50
MIB4510D40	45	HEX 41	15	M10	1200	6500	600	50	10	30	1000	50
MIB5008D40	50	HEX 41	15	M8	1200	6500	500	25,5	15	40	1500	25
MIB5010D40	50	HEX 41	15	M10	1200	6500	500	50	15	40	1500	25
MIB5510D40	55	HEX 41	15	M10	1200	6500	500	50	15	40	1500	20
MIB6010D40	60	HEX 41	15	M10	1200	6500	500	50	15	40	1500	20
MIB6510D40	65	HEX 41	15	M10	1200	6500	300	50	15	40	1500	10
MIB7010D40	70	HEX 41	15	M10	1200	6500	300	50	15	40	1500	10

T.S. - Tensile strength I C.S. - Compression strength I B.S. - Bending strength

Dimensions

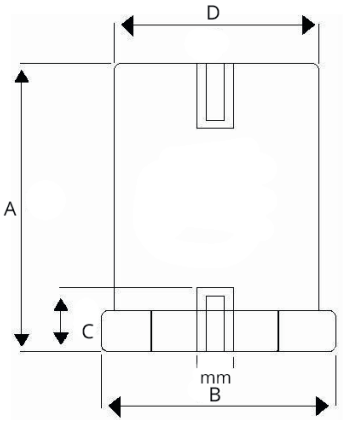

Grounding ball studs short-circuit and ground electrical equipment. Made of copper, they are electrolytically galvanized by Sn. Tested and certified to IEC/EN 61230 (5, 7) standards.






	20 mm / M12	25 mm / M12	30 mm / M12	30 mm / M16*
	MGA2012M10	MGA2512M10	MGA3012M10	MGA3016M10
Technical data				
The diameter of the spherical portion (D) (mm)	20	25	30	30
Length (L) (mm)	58,6	65,6	71,1	91
Dimensions TL / AV / D1 (mm)	16 / 24 / 27	20 / 27 / 30	20 / 27 / 30	24 / 27 / 30
Thread (T)	M12 (internal)	M12 (internal)	M12 (internal)	M16 (internal)
Max. short-circuit current	23,7 kA/1s	29,6 kA/1s	29,6 kA/1s	25 kA/1s
Weight (g)	178	208	262	344
Package (pcs)	20	20	20	10

** Grounding ball stud with 30° bent*

Dimensions

20 mm / M12
25 mm / M12
30 mm / M12

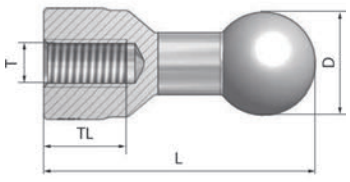

30 mm / M16

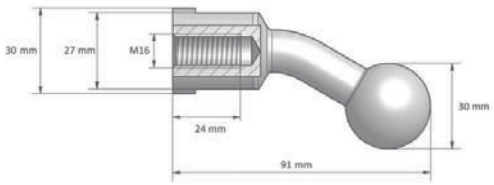

Adapter M 12

Adapter M12 is compatible three types of grounding ball studs at above.
The adapter is made of steel and plated with zinc.



	Adapter M12
	MGA0012M10
Technical data	
Length (mm)	75
Thread (T)	M12 (external)
Weight (g)	53
Package (pcs)	20

ZSMB 16 and ZSMB-I 16 earthing terminals connect protective conductors for various applications. ZSMB 16 is made of galvanized steel, while ZSMB-I 16 is made of stainless steel AISI 304. Copper or stainless steel tape (0.3x15 mm) is recommended for installation.

Example of application ZSMB earthing terminal





ZSMB 16



ZSMB-I 16

	MAE0160Z33	MAE0160S33
Technical data		
Material	Steel class 11 (galvanized)	Stainless steel AISI 304
Conductor cross-section (mm²)	2,5 ÷ 16	2,5 ÷ 16
Width (mm)	17,8	17,8
Height (mm)	40,5	40,5
Length (mm)	28,5	28,5
Tightening torque (Nm)	3	3
Weight (g)	39,8	40
Package (pcs)	200	200



MME005CU01



MME005SS01



MME010CU01



MME010SS01



MME050CU01

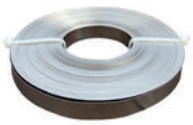

MME050SS01

	Earthing strip 0,5 m	Earthing strip 10 m	Earthing strip 50 m
Copper	MME005CU01	MME010CU01	MME050CU01
Stainless steel	MME005SS01	MME010SS01	MME050SS01
Technical data			
Dimensions (mm)	0,3 x 15	0,3 x 15	0,3 x 15
Length (mm)	500	10 000	50 000
Weight Cu / stainless (g)	21 / 18	403 / 362	2018 / 1800
Package (pcs)	300	15	5

Document holders store A4 or A6 documents in metal or plastic cabinets. They can be attached using double-sided adhesive tape or self-tapping screws (not included). The holders are made of shock-proof plastic and available in grey (RAL 7035).





	Holder A6	Holder A4
Grey (RAL 7035)	MLE0006A26	MLE0004A26
Technical data		
Width / Height / Length (mm)	140 / 170 / 24	264 / 236 / 33
Weight (g)	83	132
Package (pcs)	80	25
Material	PS	PS

Dimensions

A6

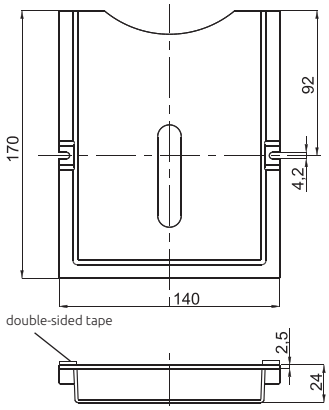

A4

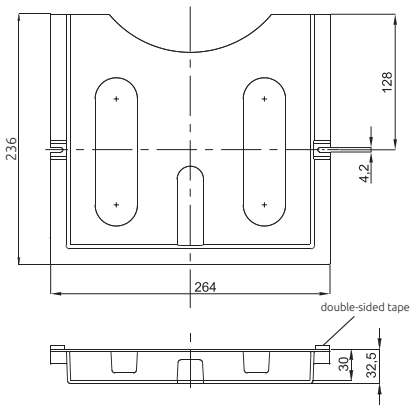

Hexagonal profile metal spacers (threaded standoffs) are versatile and heat-resistant, designed for various applications. Sizes suitable for M3, M4, M5, M6, and M8 thread holes.



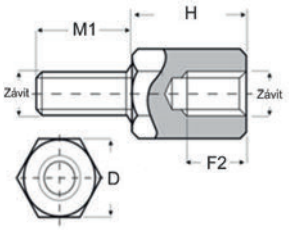

Order code	Dimensions (mm) H	D	Thread	M1	F2	Tightening torque (Nm)	Weight (g)	Package (pcs)
MMF0053D07	5	7	M3	6	2,5	1,12	1,8	100
MMF0083D07	8	7	M3	6	3,5	1,12	2,7	100
MMF0103D07	10	7	M3	6	5	1,12	3,5	100
MMF0123D07	12	7	M3	6	6	1,12	4,2	100
MMF0153D07	15	7	M3	6	6	1,12	5,2	100
MMF0203D07	20	7	M3	6	6	1,12	6,9	100
MMF0253D07	25	7	M3	6	6	1,12	8,6	100
MMF0303D07	30	7	M3	6	6	1,12	10	100
MMF1203D07	120	7	M3	6	6	1,12	40,7	100
MMF0104D07	10	7	M4	8	5	2,55	3,6	100
MMF0154D07	15	7	M4	8	10	2,55	4,9	100
MMF0204D07	20	7	M4	8	10	2,55	6,5	100
MMF0254D07	25	7	M4	8	10	2,55	8,1	100
MMF0304D07	30	7	M4	8	10	2,55	9,6	100
MMF0354D07	35	7	M4	8	10	2,55	11,3	100
MMF0404D07	40	7	M4	8	10	2,55	12,9	100
MMF0454D07	45	7	M4	8	10	2,55	14,5	100
MMF0504D07	50	7	M4	8	10	2,55	16,3	100
MMF0604D07	60	7	M4	8	10	2,55	19,8	50
MMF0704D07	70	7	M4	8	10	2,55	23	50
MMF0804D07	80	7	M4	8	10	2,55	26,4	50
MMF0904D07	90	7	M4	8	10	2,55	29,6	50
MMF1004D07	100	7	M4	8	10	2,55	32,8	50
MMF1104D07	110	7	M4	8	10	2,55	36	50
MMF1204D07	120	7	M4	8	10	2,55	42,5	50
MMF0105D08	10	8	M5	8	7	5,05	45	100
MMF0155D08	15	8	M5	8	10	5,05	6	100
MMF0205D08	20	8	M5	8	10	5,05	8,1	100
MMF0255D08	25	8	M5	8	10	5,05	10,1	100
MMF0305D08	30	8	M5	8	10	5,05	12,1	100
MMF0355D08	35	8	M5	8	10	5,05	14	100
MMF0405D08	40	8	M5	8	10	5,05	16,6	100
MMF0455D08	45	8	M5	8	10	5,05	18,5	100
MMF0505D08	50	8	M5	8	10	5,05	21,4	50
MMF0605D08	60	8	M5	8	10	5,05	25,4	50
MMF0705D08	70	8	M5	8	10	5,05	29,6	50
MMF0805D08	80	8	M5	8	10	5,05	34	25
MMF0905D08	90	8	M5	8	10	5,05	38,4	50
MMF1005D08	100	8	M5	8	10	5,05	42,6	50
MMF1105D08	110	8	M5	8	10	5,05	47	50
MMF1205D08	120	8	M5	8	10	5,05	52	50
MMF0106D10	10	10	M6	10	8	8,72	6,5	100
MMF0156D10	15	10	M6	10	10	8,72	9,7	100
MMF0206D10	20	10	M6	10	10	8,72	12,9	100
MMF0256D10	25	10	M6	10	10	8,72	16,2	100
MMF0306D10	30	10	M6	10	10	8,72	19,4	100
MMF0356D10	35	10	M6	10	10	8,72	22,2	50
MMF0406D10	40	10	M6	10	10	8,72	26,6	50
MMF0456D10	45	10	M6	10	10	8,72	29,8	50
MMF0506D10	50	10	M6	10	10	8,72	33,2	50
MMF0606D10	60	10	M6	10	10	8,72	40	50
MMF0706D10	70	10	M6	10	10	8,72	53,6	50
MMF0806D10	80	10	M6	10	10	8,72	55,2	50
MMF0906D10	90	10	M6	10	10	8,72	68	25
MMF1006D10	100	10	M6	10	10	8,72	69,6	25
MMF1106D10	110	10	M6	10	10	8,72	72	25
MMF1206D10	120	10	M6	10	10	8,72	77	25
MMF0108D12	10	12	M8	14	6	21,53	8,8	100
MMF0158D12	15	12	M8	14	10	21,53	13,2	100
MMF0208D12	20	12	M8	14	14	21,53	17,7	100
MMF0258D12	25	12	M8	14	14	21,53	23,4	50
MMF0308D12	30	12	M8	14	14	21,53	27,8	50
MMF0358D12	35	12	M8	14	14	21,53	32,4	50
MMF0408D12	40	12	M8	14	14	21,53	37	50
MMF0458D12	45	12	M8	14	14	21,53	42,8	25
MMF0508D12	50	12	M8	14	14	21,53	47,6	25
MMF0608D12	60	12	M8	14	14	21,53	57,6	25
MMF0708D12	70	12	M8	14	14	21,53	67,2	25
MMF0808D12	80	12	M8	14	14	21,53	78,8	25
MMF0908D12	90	12	M8	14	14	21,53	88,4	25
MMF1008D12	100	12	M8	14	14	21,53	95,6	25
MMF1108D12	110	12	M8	14	14	21,53	103	25
MMF1208D12	120	12	M8	14	14	21,53	113	25
MMF0108D13	10	13	M8	14	6	21,53	11	50
MMF0158D13	15	13	M8	14	10	21,53	17	50
MMF0208D13	20	13	M8	14	14	21,53	21,4	50
MMF0258D13	25	13	M8	14	14	21,53	26,6	50
MMF0308D13	30	13	M8	14	14	21,53	34	50
MMF0358D13	35	13	M8	14	14	21,53	39	25
MMF0408D13	40	13	M8	14	14	21,53	44,8	25
MMF0458D13	45	13	M8	14	14	21,53	50	25
MMF0508D13	50	13	M8	14	14	21,53	56,4	25
MMF0608D13	60	13	M8	14	14	21,53	67	25
MMF0708D13	70	13	M8	14	14	21,53	78,8	25
MMF0808D13	80	13	M8	14	14	21,53	90	25
MMF0908D13	90	13	M8	14	14	21,53	101	25
MMF1008D13	100	13	M8	14	14	21,53	112	25
MMF1108D13	110	13	M8	14	14	21,53	123	25
MMF1208D13	120	13	M8	14	14	21,53		25

Hexagonal profile plastic spacers (threaded standoffs) are lightweight, flame-retardant, and electrically insulating (1,500 V). Moulded in self-extinguishing polystyrene (UL 94 V0, RAL 7035) with a zinc-plated steel thread insert, for operating temperatures up to 90 °C. Sizes suitable for M4, M5, and M6 thread holes.

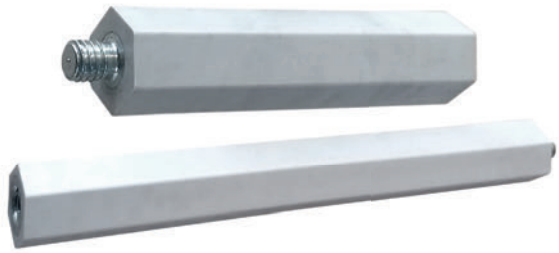

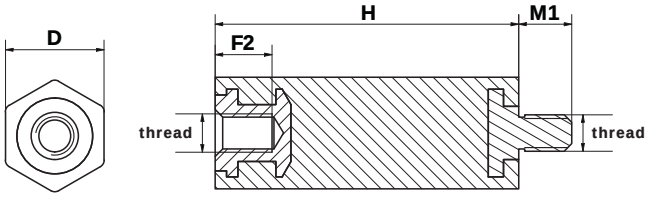

Order code	Dimensions (mm) H	D	Thread	M1	F2	Tightening torque (Nm)	Weight (g)	Package (pcs)
MMP1054D13	105	13	M4	7	7	1.8	210	50
MMP1104D13	110	13	M4	7	7	1.8	210	50
MMP1154D13	115	13	M4	7	7	1.8	220	50
MMP0154D13	15	13	M4	7	5	1.8	90	50
MMP1204D13	120	13	M4	7	7	1.8	230	50
MMP0204D13	20	13	M4	7	7	1.8	90	50
MMP1254D13	125	13	M4	7	7	1.8	230	50
MMP0254D13	25	13	M4	7	7	1.8	110	50
MMP1304D13	130	13	M4	7	7	1.8	230	50
MMP0304D13	30	13	M4	7	7	1.8	120	50
MMP0354D13	35	13	M4	7	7	1.8	120	50
MMP0404D13	40	13	M4	7	7	1.8	130	50
MMP0454D13	45	13	M4	7	7	1.8	140	50
MMP0504D13	50	13	M4	7	7	1.8	140	50
MMP0554D13	55	13	M4	7	7	1.8	150	50
MMP0604D13	60	13	M4	7	7	1.8	160	50
MMP0654D13	65	13	M4	7	7	1.8	160	50
MMP0704D13	70	13	M4	7	7	1.8	170	50
MMP0754D13	75	13	M4	7	7	1.8	170	50
MMP0804D13	80	13	M4	7	7	1.8	180	50
MMP0854D13	85	13	M4	7	7	1.8	190	50
MMP0904D13	90	13	M4	7	7	1.8	190	50
MMP0954D13	95	13	M4	7	7	1.8	200	50

Order code	Dimensions (mm) H	D	Thread	M1	F2	Tightening torque (Nm)	Weight (g)	Package (pcs)
MMP1004D13	100	13	M4	7	7	1.8	200	50
MMP1055D13	105	13	M5	7	7	2.5	230	50
MMP1105D13	110	13	M5	7	7	2.5	240	50
MMP1155D13	115	13	M5	7	7	2.5	240	50
MMP0155D13	15	13	M5	7	5	2.5	80	50
MMP1205D13	120	13	M5	7	7	2.5	250	50
MMP0205D13	20	13	M5	7	7	2.5	90	50
MMP1255D13	125	13	M5	7	7	2.5	250	50
MMP0255D13	25	13	M5	7	7	2.5	200	50
MMP1305D13	130	13	M5	7	7	2.5	240	50
MMP0305D13	30	13	M5	7	7	2.5	110	50
MMP0355D13	35	13	M5	7	7	2.5	120	50
MMP0405D13	40	13	M5	7	7	2.5	130	50
MMP0455D13	45	13	M5	7	7	2.5	130	50
MMP0505D13	50	13	M5	7	7	2.5	140	50
MMP0555D13	55	13	M5	7	7	2.5	150	50
MMP0605D13	60	13	M5	7	7	2.5	160	50
MMP0655D13	65	13	M5	7	7	2.5	160	50
MMP0705D13	70	13	M5	7	7	2.5	170	50
MMP0755D13	75	13	M5	7	7	2.5	180	50
MMP0805D13	80	13	M5	7	7	2.5	190	50
MMP0855D13	85	13	M5	7	7	2.5	190	50
MMP0905D13	90	13	M5	7	7	2.5	200	50
MMP0955D13	95	13	M5	7	7	2.5	210	50
MMP1005D13	100	13	M5	7	7	2.5	220	50
MMP1056D13	105	13	M6	7	7	3.0	230	50
MMP1106D13	110	13	M6	7	7	3.0	240	50
MMP1156D13	115	13	M6	7	7	3.0	240	50
MMP0156D13	15	13	M6	7	5	3.0	80	50
MMP1206D13	120	13	M6	7	7	3.0	250	50
MMP0206D13	20	13	M6	7	7	3.0	90	50
MMP1256D13	125	13	M6	7	7	3.0	250	50
MMP0256D13	25	13	M6	7	7	3.0	100	50
MMP1306D13	130	13	M6	7	7	3.0	260	50
MMP0306D13	30	13	M6	7	7	3.0	110	50
MMP0356D13	35	13	M6	7	7	3.0	120	50
MMP0406D13	40	13	M6	7	7	3.0	120	50
MMP0456D13	45	13	M6	7	7	3.0	130	50
MMP0506D13	50	13	M6	7	7	3.0	140	50
MMP0556D13	55	13	M6	7	7	3.0	150	50
MMP0606D13	60	13	M6	7	7	3.0	160	50
MMP0656D13	65	13	M6	7	7	3.0	160	50
MMP0706D13	70	13	M6	7	7	3.0	170	50
MMP0756D13	75	13	M6	7	7	3.0	180	50
MMP0806D13	80	13	M6	7	7	3.0	190	50
MMP0856D13	85	13	M6	7	7	3.0	200	50
MMP0906D13	90	13	M6	7	7	3.0	200	50
MMP0956D13	95	13	M6	7	7	3.0	200	50
MMP1006D13	100	13	M6	7	7	3.0	220	50

Quarter-turn locks securely fasten hatches, cabinets, lockers, and machine doors. They are durable, easy to use, and widely applicable in construction projects. Our standard quarter-turn locks include a 10mm triangle insert, keys, wing knobs, dust covers, and finger pulls. Locknuts are included, and additional locks and accessories can be provided upon request.

	Lock
	NL02C104C1F1835
Technical data	
Insert	Triangle 10 / M5
Latch (mm)	35
Depth (mm)	18
Diameter (mm)	28
Package (pcs)	250



Key, wing knob, dust cover, finger pull









	Key	Wing knob	Dust cover	Finger pull
	NCL101ZZ003	NCL114PP004	NCL134PP001	NCL124PP001
Technical data				
For insert	Triangle 10	Triangle 10	-	-
Package (pcs)	50	500	200	250

Dimensions

Lock

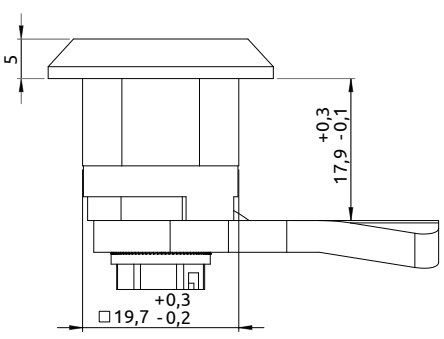

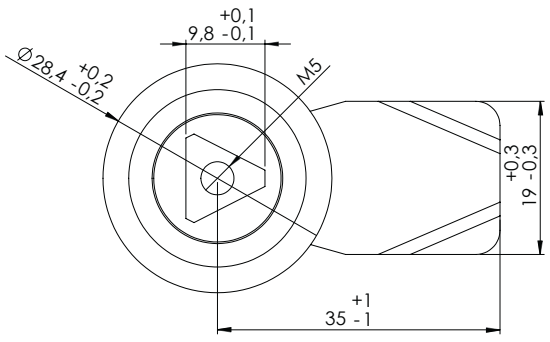

Snap-in sliding latch offers an easy and toolless solution for cabinet doors and lids without requiring a lock. Its simple design allows for quick and effortless installation.

	Sliding latch
	NFN004PP001
Technical data	
Door thickness (mm)	0,8–2,0
Package (pcs)	500

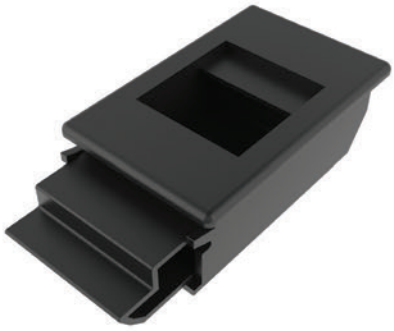

Dimensions

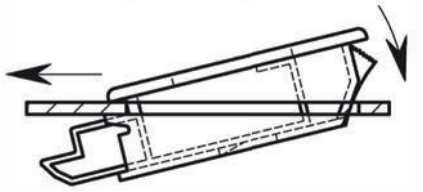

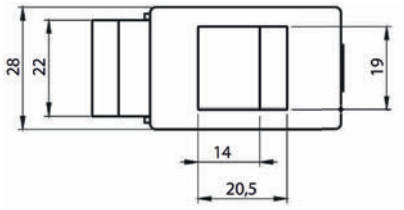

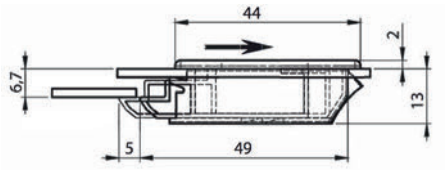

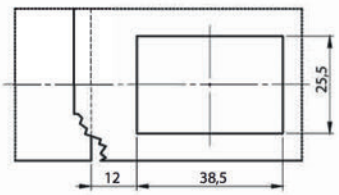

Flush handle

Quick and easy snap-in installation with fiberglass-reinforced polyamide material. Other sizes available upon request.

	Flush handle
	NHP0816B01
Technical data	
Door thickness (mm)	0,8–1,6
Package (pcs)	250



Dimensions

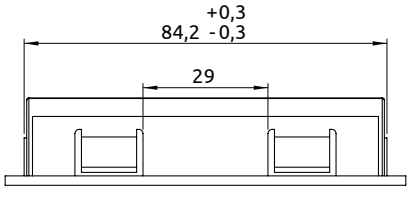

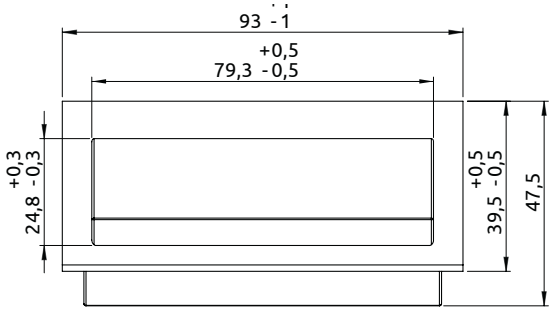

We are offering a selection of fiberglass-reinforced polyamide and steel tube door handles, suitable for electrical cabinet and machinery doors and hatches. Steel tube door handles consist of middle supports (1), tubes of varying lengths (2) and end-pieces (3). Using middle support is required with tube lengths of 1000 mm and larger.

	Door handle	Door handle
	NHP0122B01	NHP0150B01
Technical data		
Length L/L1 (mm)	142/122	170/150
Dimensions H/T1/T2	45/7/12	54/9/14
Package (pcs)	200	150



Tube door handle

Order code	Type	Package (pcs)
NHP0021B01	End piece	250
NHP0022B01	Center support	250
NHP0200B01	Tube 200 mm	70
NHP0300B01	Tube 300 mm	45
NHP0500B01	Tube 500 mm	25

Other lengths are available on request.



Dimensions

Door handles

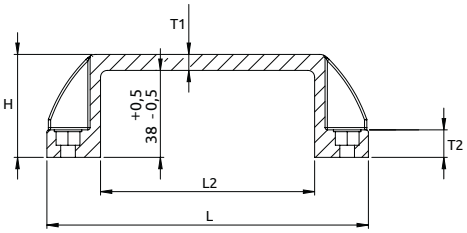

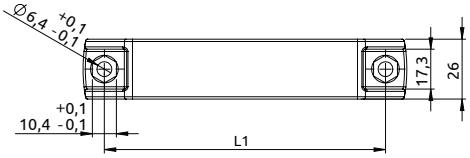

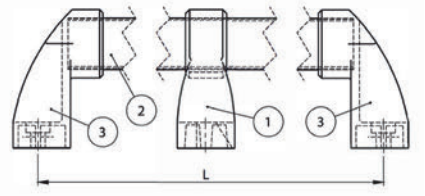

End piece

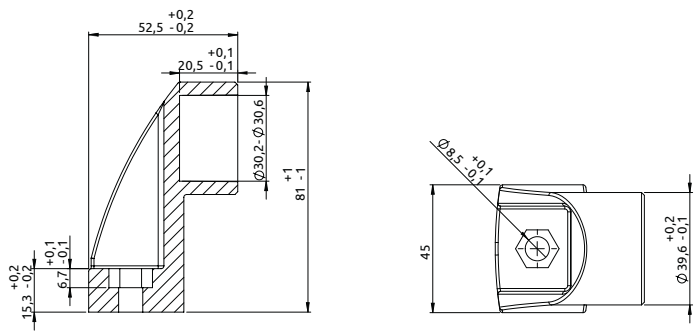

Center support

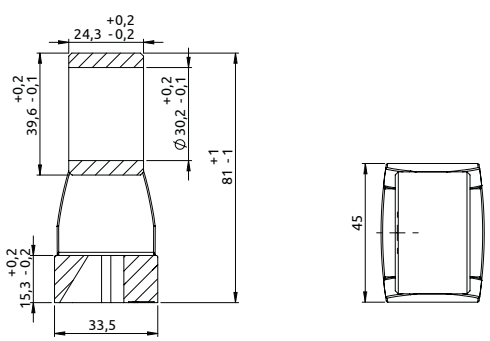

180° hinges are a simple and effective way for mounting cabinet doors. Hinges are made of die cast zinc with black coating, the pin is made of zinc-plated steel. Other colors are available on request.

	180° *hinge*
	NE3418Z40001
Technical data	
Door thickness (mm)	1,5–2,0
Package (pcs)	200



Dimensions

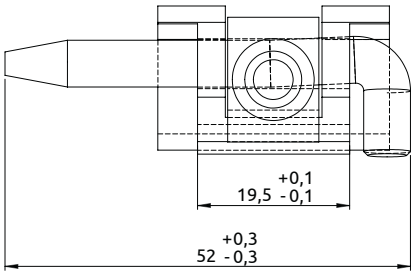

Wind stop

Cabinet door wind stops are essential accessories for outdoor cabinets, preventing accidental door closure. They are made of zinc-plated steel, with a stainless steel version available upon request.

	Wind stop
	NCM141ZZ001
Technical data	
Package (pcs)	50



Dimensions

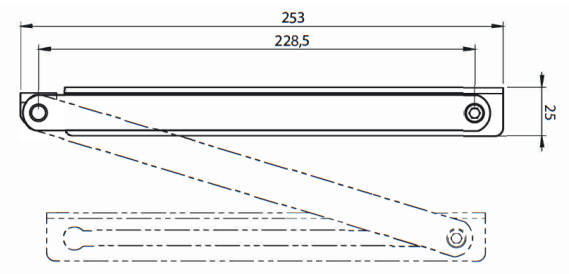

Insulated copper flexible busbars Moflex

Insulated copper flexible busbars Moflex are manufactured out of highly flexible copper strips either in bare or tinned version. They are insulated with high quality mechanical, electrical and self-extinguishing PVC.

Halogen free available

Flexible
at low temperatures

5 year
warranty

Certified according to standards EN 61439-1:2011. Low Voltage Directive No. 2014/35/EU



Technical details
Electrolytic copper Cu-ETP 99,90%
Available in plain or tin-plated copper

Insulation
Self-extinguishing UL 94 V-0 black PVC insulation
Elongation: > 200 %
Tensile strength: > 15 N/mm²

Electrical characteristics
Nominal voltage 1000 V AC – 1500 V DC
Dielectric strength of the insulation: > 20 KV/mm
Operating temperature: -40 °C* up to 105 °C*
** not during dynamic pressure*

Due to skin effect,
on average

45 %

smaller cross-section
compared to regular
copper cable

Copper cable
150 mm²

1 x Moflex
24 x 1 x 2
48 mm²



320 A
68 %
smaller

Copper cables
2 x 150 mm²
300 mm²

1 x Moflex
32 x 1 x 5
160 mm²



630 A
47 %
smaller

Copper cables
3 x 240 mm²
720 mm²

1 x Moflex
80 x 1 x 6
480 mm²



1250 A
33 %
smaller

In all examples above, intensities of Moflex and regular cable are calculated using the temperature rise value of 50° C.

Remarks about the tables

Description of the order code
E.g., MMC0801001
MM – Moflex
C – red copper
(T - in case of tinned copper)
080 – width
10 – number of sheets

* Products with the length of 3 meters can be ordered separately

** Reduction factor for the use of flexible busbars in parallel (see table on page 85)

When you use the Moflex flexible busbars parallel for the same phase, you need to use the reduction factors shown in the following example.

MMC0500401 Moflex 50x1x4, 200 mm², 732A at ΔT=50
2 flexible busbars in parallel: 732 x1,72 = 1259A
3 flexible busbars in parallel: 732 x2,25 = 1647A

The table on the page 85 indicates the temperature rise produced by chosen current in the given cross section. This calculation does not take into account the heat dissipation from the switchboard.

***** If you would like to place an order for **tin plated** copper flexible busbars, please ensure that you modify the third letter in the ordering code to "T".

To the total dimensions of the flexible busbar, 2 mm of PVC insulation thickness must be added.

Technical specification (based on width)

W (mm)	Red copper Order code	Halogen free* Order code	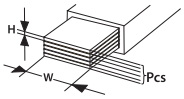 W x H x Pcs	Length*	Package (pcs)	Copper weight per meter (kg)
9	MMC0090201	MMC00902H1	**9 x 0,8 x 2**	2 m	10	0,128
	MMC0090301	MMC00903H1	**9 x 0,8 x 3**	2 m	10	0,193
	MMC0090401	MMC00904H1	**9 x 0,8 x 4**	2 m	10	0,256
	MMC0090501	MMC00905H1	**9 x 0,8 x 5**	2 m	10	0,321
	MMC0090601	MMC00906H1	**9 x 0,8 x 6**	2 m	10	0,385
15,5	MMC0160201	MMC01602H1	**15,5 x 0,8 x 2**	2 m	10	0,214
	MMC0160401	MMC01604H1	**15,5 x 0.8 x 4**	2 m	10	0,428
	MMC0160601	MMC01606H1	**15,5 x 0,8 x 6**	2 m	10	0,642
	MMC0161001	MMC01610H1	**15,5 x 0,8 x 10**	2 m	10	1,071
20	MMC0200201	MMC02002H1	**20 x 1 x 2**	2 m	5	0,357
	MMC0200301	MMC02003H1	**20 x 1 x 3**	2 m	5	0,535
	MMC0200401	MMC02004H1	**20 x 1 x 4**	2 m	5	0,714
	MMC0200501	MMC02005H1	**20 x 1 x 5**	2 m	5	0,892
	MMC0200601	MMC02006H1	**20 x 1 x 6**	2 m	5	1,071
	MMC0201001	MMC02010H1	**20 x 1 x 10**	2 m	5	1,784
24	MMC0240201	MMC02402H1	**24 x 1 x 2**	2 m	5	0,428
	MMC0240301	MMC02403H1	**24 x 1 x 3**	2 m	5	0,642
	MMC0240401	MMC02404H1	**24 x 1 x 4**	2 m	5	0,857
	MMC0240501	MMC02405H1	**24 x 1 x 5**	2 m	5	1,071
	MMC0240601	MMC02406H1	**24 x 1 x 6**	2 m	5	1,285
	MMC0240801	MMC02408H1	**24 x 1 x 8**	2 m	5	1,713
	MMC0241001	MMC02410H1	**24 x 1 x 10**	2 m	5	2,142
32	MMC0320201	MMC03202H1	**32 x 1 x 2**	2 m	5	0,571
	MMC0320301	MMC03203H1	**32 x 1 x 3**	2 m	5	0,857
	MMC0320401	MMC03204H1	**32 x 1 x 4**	2 m	5	1,142
	MMC0320501	MMC03205H1	**32 x 1 x 5**	2 m	5	1,428
	MMC0320601	MMC03206H1	**32 x 1 x 6**	2 m	5	1,713
	MMC0320801	MMC03208H1	**32 x 1 x 8**	2 m	5	2,284
	MMC0321001	MMC03210H1	**32 x 1 x 10**	2 m	5	2,851
40	MMC0400201	MMC04002H1	**40 x 1 x 2**	2 m	5	0,714
	MMC0400301	MMC04003H1	**40 x 1 x 3**	2 m	5	1,071
	MMC0400401	MMC04004H1	**40 x 1 x 4**	2 m	5	1,428
	MMC0400501	MMC04005H1	**40 x 1 x 5**	2 m	5	1,784
	MMC0400601	MMC04006H1	**40 x 1 x 6**	2 m	5	2,141
	MMC0400801	MMC04008H1	**40 x 1 x 8**	2 m	5	2,855
	MMC0401001	MMC04010H1	**40 x 1 x 10**	2 m	5	3,569
50	MMC0500301	MMC05003H1	**50 x 1 x 3**	2 m	2	1,338
	MMC0500401	MMC05004H1	**50 x 1 x 4**	2 m	2	1,784
	MMC0500501	MMC05005H1	**50 x 1 x 5**	2 m	2	2,231
	MMC0500601	MMC05006H1	**50 x 1 x 6**	2 m	2	2,677
	MMC0500801	MMC05008H1	**50 x 1 x 8**	2 m	2	3,569
	MMC0501001	MMC05010H1	**50 x 1 x 10**	2 m	2	4,461
63	MMC0630301	MMC06303H1	**63 x 1 x 3**	2 m	2	1,686
	MMC0630401	MMC06304H1	**63 x 1 x 4**	2 m	2	2,248
	MMC0630501	MMC06305H1	**63 x 1 x 5**	2 m	2	2,811
	MMC0630601	MMC06306H1	**63 x 1 x 6**	2 m	2	3,373
	MMC0630801	MMC06308H1	**63 x 1 x 8**	2 m	2	4,497
	MMC0631001	MMC06310H1	**63 x 1 x 10**	2 m	2	5,621
80	MMC0800301	MMC08003H1	**80 x 1 x 3**	2 m	2	2,141
	MMC0800401	MMC08004H1	**80 x 1 x 4**	2 m	2	2,851
	MMC0800501	MMC08005H1	**80 x 1 x 5**	2 m	2	3,569
	MMC0800601	MMC08006H1	**80 x 1 x 6**	2 m	2	4,283
	MMC0800801	MMC08008H1	**80 x 1 x 8**	2 m	2	5,710
	MMC0801001	MMC08010H1	**80 x 1 x 10**	2 m	2	7,138
100	MMC1000401	MMC10004H1	**100 x 1 x 4**	2 m	2	3,569
	MMC1000501	MMC10005H1	**100 x 1 x 5**	2 m	2	4,461
	MMC1000601	MMC10006H1	**100 x 1 x 6**	2 m	2	5,353
	MMC1000801	MMC10008H1	**100 x 1 x 8**	2 m	2	7,138
	MMC1001001	MMC10010H1	**100 x 1 x 10**	2 m	2	8,922

Technical specification (based on amperage)

Amperage (A)	Red copper Order code	Halogen free* Order code	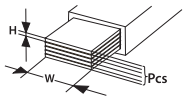 W x H x Pcs	Copper weight per meter (kg)	Cu cross section (mm²)	Ampacity at rise of temperature from 35° C to: 105 °C ΔT=70	95 °C ΔT=60	85 °C ΔT=50	75 °C ΔT=40	65 °C ΔT=30	Reduction factor**	
> 80	MMC0090201	MMC00902H1	9 x 0,8 x 2	0,128	14	113	105	**96**	86	74	1,72	2,25
> 125	MMC0090301	MMC00903H1	9 x 0,8 x 3	0,193	21,6	160	149	**136**	121	104	1,72	2,25
> 160	MMC0090401	MMC00904H1	9 x 0,8 x 4	0,256	29	204	189	**173**	155	133	1,72	2,25
	MMC0090501	MMC00905H1	9 x 0,8 x 5	0,321	36	272	253	**231**	206	177	1,72	2,25
	MMC0160201	MMC01602H1	15,5 x 0,8 x 2	0,214	24,8	197	183	**167**	149	128	1,72	2,25
> 250	MMC0090601	MMC00906H1	9 x 0,8 x 6	0,385	43,2	340	316	**289**	258	221	1,72	2,25
	MMC0200201	MMC02002H1	20 x 1 x 2	0,357	40	329	306	**280**	250	215	1,72	2,25
> 320	MMC0160401	MMC01604H1	15,5 x 0,8 x 4	0,428	49,6	379	353	**322**	288	247	1,72	2,25
	MMC0200301	MMC02003H1	20 x 1 x 3	0,535	60	427	397	**363**	324	278	1,72	2,25
	MMC0240201	MMC02402H1	24 x 1 x 2	0,428	48	451	419	**384**	342	294	1,72	2,25
> 400	MMC0160601	MMC01606H1	15,5 x 0,8 x 6	0,642	74,4	489	455	**416**	371	319	1,72	2,25
	MMC0161001	MMC01610H1	15,5 x 0,8 x 10	1,071	124	539	501	**458**	409	351	1,72	2,25
	MMC0200401	MMC02004H1	20 x 1 x 4	0,714	80	478	444	**406**	363	311	1,72	2,25
	MMC0200501	MMC02005H1	20 x 1 x 5	0,892	100	497	463	**423**	378	324	1,72	2,25
	MMC0200601	MMC02006H1	20 x 1 x 6	1,071	120	547	509	**465**	415	356	1,72	2,25
	MMC0240301	MMC02403H1	24 x 1 x 3	0,642	72	491	457	**418**	373	320	1,72	2,25
	MMC0240401	MMC02404H1	24 x 1 x 4	0,857	96	553	514	**470**	420	360	1,72	2,25
	MMC0320201	MMC03202H1	32 x 1 x 2	0,571	64	483	450	**411**	367	315	1,72	2,25
	MMC0320301	MMC03203H1	32 x 1 x 3	0,857	96	569	529	**484**	432	371	1,72	2,25
	MMC0400201	MMC04002H1	40 x 1 x 2	0,714	80	535	498	**455**	406	349	1,72	2,25
> 500	MMC0240501	MMC02405H1	24 x 1 x 5	1,071	120	610	568	**519**	463	398	1,72	2,25
	MMC0240601	MMC02406H1	24 x 1 x 6	1,285	144	674	626	**573**	511	439	1,72	2,25
	MMC0320401	MMC03204H1	32 x 1 x 4	1,142	128	652	606	**554**	495	425	1,72	2,25
	MMC0400301	MMC04003H1	40 x 1 x 3	1,071	120	618	575	**525**	469	403	1,72	2,25
	MMC0400401	MMC04004H1	40 x 1 x 4	1,428	160	727	676	**618**	552	474	1,72	2,25
	MMC0500301	MMC05003H1	50 x 1 x 3	1,338	150	701	652	**597**	532	457	1,72	2,25
> 630	MMC0201001	MMC02010H1	20 x 1 x 10	1,784	200	763	709	**649**	579	497	1,72	2,25
	MMC0240801	MMC02408H1	24 x 1 x 8	1,713	192	800	744	**681**	607	522	1,72	2,25
	MMC0241001	MMC02410H1	24 x 1 x 10	2,142	240	875	814	**744**	664	570	1,72	2,25
	MMC0320501	MMC03205H1	32 x 1 x 5	1,428	160	762	708	**648**	578	496	1,72	2,25
	MMC0320601	MMC03206H1	32 x 1 x 6	1,713	192	850	790	**723**	645	554	1,72	2,25
	MMC0400501	MMC04005H1	40 x 1 x 5	1,784	200	903	840	**768**	686	589	1,72	2,25
	MMC0500401	MMC05004H1	50 x 1 x 4	1,784	200	861	801	**732**	654	561	1,72	2,25
	MMC0630301	MMC06303H1	63 x 1 x 3	1,686	189	802	746	**683**	609	523	1,65	2,12
> 800	MMC0320801	MMC03208H1	32 x 1 x 8	2,284	256	1023	951	**870**	777	667	1,72	2,25
	MMC0400601	MMC04006H1	40 x 1 x 6	2,141	240	1018	947	**866**	773	663	1,72	2,25
	MMC0500501	MMC05005H1	50 x 1 x 5	2,231	250	1098	1021	**934**	834	716	1,72	2,25
	MMC0630401	MMC06304H1	63 x 1 x 4	2,248	252	1013	942	**861**	769	660	1,65	2,12
	MMC0800301	MMC08003H1	80 x 1 x 3	2,141	240	977	909	**831**	742	637	1,65	2,12
> 1000	MMC0321001	MMC03210H1	32 x 1 x 10	2,851	320	1233	1147	**1049**	936	804	1,72	2,25
	MMC0400801	MMC04008H1	40 x 1 x 8	2,855	320	1233	1146	**1048**	936	803	1,72	2,25
	MMC0401001	MMC04010H1	40 x 1 x 10	3,569	400	1397	1300	**1189**	1061	911	1,65	2,12
	MMC0500601	MMC05006H1	50 x 1 x 6	2,677	300	1226	1140	**1043**	931	799	1,65	2,12
	MMC0500801	MMC05008H1	50 x 1 x 8	3,569	400	1392	1295	**1184**	1057	907	1,65	2,12
	MMC0630501	MMC06305H1	63 x 1 x 5	2,811	315	1223	1137	**1040**	928	797	1,65	2,12
	MMC0630601	MMC06306H1	63 x 1 x 6	3,373	378	1442	1341	**1226**	1095	940	1,65	2,12
	MMC0800401	MMC08004H1	80 x 1 x 4	2,851	320	1202	1118	**1022**	912	783	1,65	2,12
	MMC0800501	MMC08005H1	80 x 1 x 5	3,569	400	1395	1298	**1187**	1059	909	1,65	2,12
	MMC1000401	MMC10004H1	100 x 1 x 4	3,569	400	1449	1348	**1233**	1100	945	1,6	2,02
> 1250	MMC0501001	MMC05010H1	50 x 1 x 10	4,461	500	1651	1535	**1404**	1253	1076	1,65	2,12
	MMC0630801	MMC06308H1	63 x 1 x 8	4,497	504	1656	1540	**1409**	1257	1079	1,65	2,12
	MMC0800601	MMC08006H1	80 x 1 x 6	4,283	480	1630	1516	**1387**	1238	1063	1,65	2,12
	MMC1000501	MMC10005H1	100 x 1 x 5	4,461	500	1638	1523	**1393**	1243	1067	1,6	2,02
	MMC1000601	MMC10006H1	100 x 1 x 6	5,353	600	1845	1715	**1569**	1400	1202	1,6	2,02
> 1600	MMC0631001	MMC06310H1	63 x 1 x 10	5,621	630	1901	1768	**1617**	1443	1239	1,65	2,12
	MMC0800801	MMC08008H1	80 x 1 x 8	5,71	640	1902	1769	**1618**	1444	1240	1,65	2,12
	MMC0801001	MMC08010H1	80 x 1 x 10	7,138	800	2106	1958	**1791**	1599	1372	1,65	2,12
	MMC1000801	MMC10008H1	100 x 1 x 8	7,138	800	2152	2001	**1830**	1634	1402	1,6	2,02
> 2000	MMC1001001	MMC10010H1	100 x 1 x 10	8,922	1000	2353	2188	**2001**	1786	1533	1,6	2,02

Selection of Moflex

ΔT = temperature rise of the Moflex conductor (°C)
T1 = internal temperature of the switchboard (°C)
T2 = temperature of the Moflex conductor (°C)

For example, In = 1000A connection

Step 1: T1 = 35 °C and T2 = 85 °C
ΔT = T2 - T1
ΔT = 85 °C - 35 °C
ΔT = 50 °C

Step 2: Please find from the page 85 table on the column ΔT = 50 the closest value of the 1000A.
MMC0321001 Moflex 32x1x10, 320 mm², 1049A
or
MMC0630501 Moflex 63x1x5, 315 mm², 1040A.

Step 3: Select the Moflex flexible busbar according to the equipment terminal width.

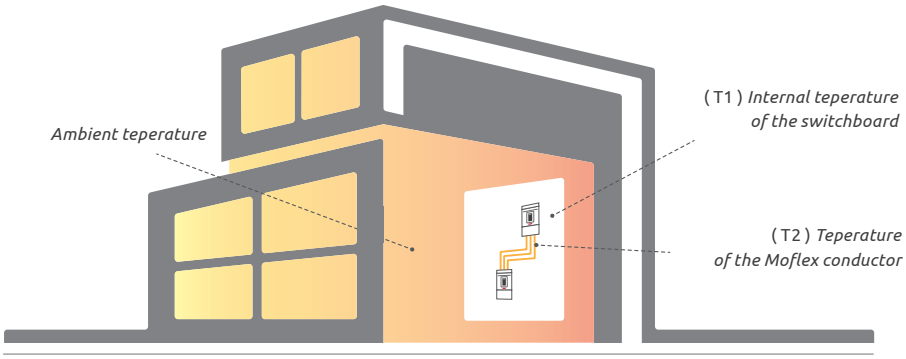



Moflex saves you time and money



Does not require additional connection parts and saves the time of installation

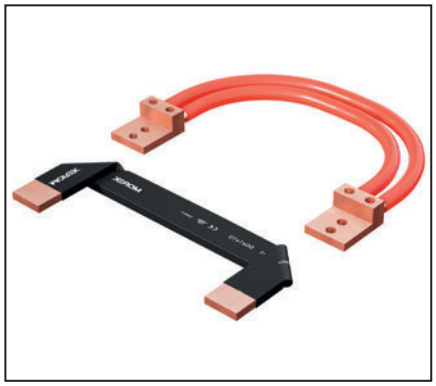

Makes direct connection without additional connectors, enables you to save space in the panel



Gives additional flexibility comparing to standard rigid bar and it is easily adapted to unexpected project change

Assembly instructions

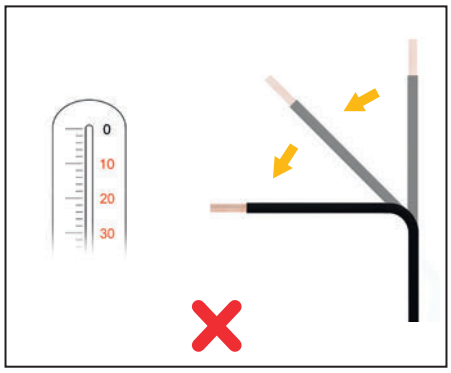

No bending at low temperatures (< 0°C or < 30F)
Elongation of the coating before breakage is reduced at low temperatures. Recommended is bending at room temperature.

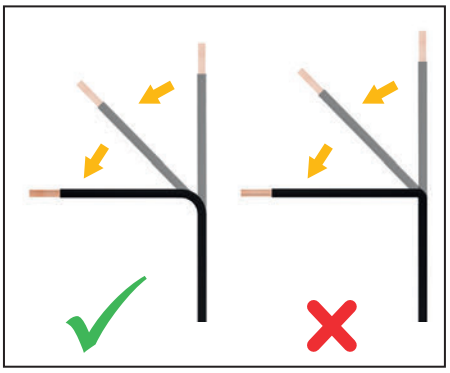

No sharp-edged bending
Recommended inner radius for bending: busbar thickness 1 - 5 mm: radius 5 mm busbar thickness 6 - 10 mm: radius = thickness

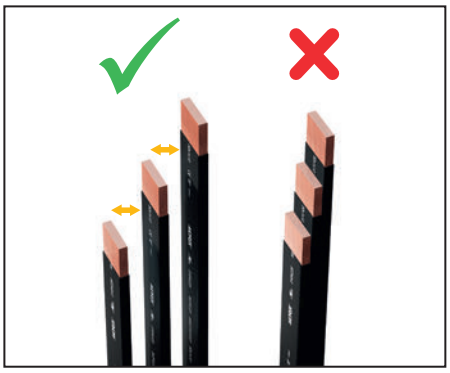

Parallel assembly has influence to heat radiation
Recommended distance between bars = min. 1 x bar width. Please pay attention to correction factors for parallel assembly!

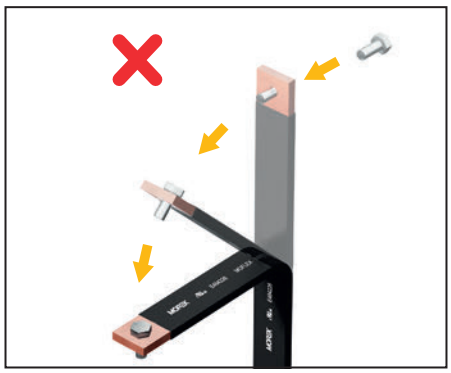

Copper files slide when bending to compensate the different length of inner and outer file
No fixation before bending! It hinders the slide and may lead to burst of PVC-coating.

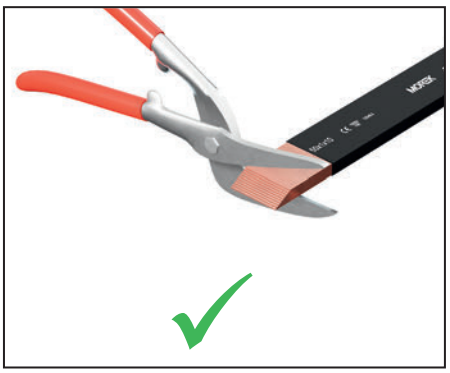

Bars must be cut if copper slides emerge after bending

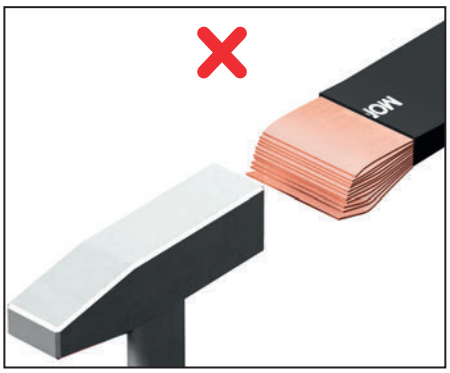

Heavy push back of copper files may cause deformation with resulting damage of PVC-coating

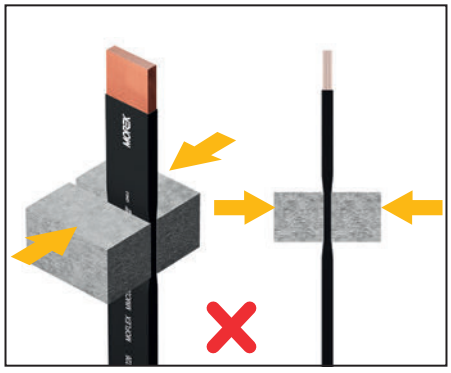

Please avoid crushing of the PVC coating
Damage of coating or reduced wall thickness endangers function of isolation.

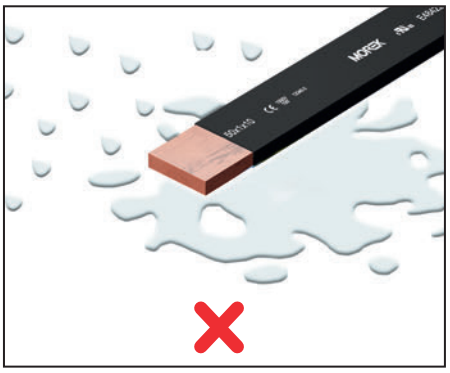

Do not expose to dirt, water and humidity
Humidity may invade by the open ends of the busbars. This causes copper oxidation and endangers operating safety.

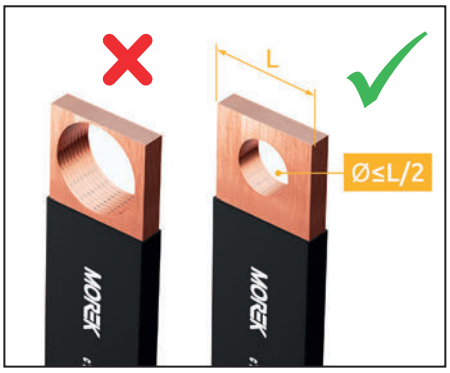

Do not drill holes exceeding half of the width of the bar

Moflex clamp is designed for connecting Moflex flexible busbars to copper busbar, enabling fastening up to 50 x 10 mm Moflex flexible busbars to 50 x 10 mm copper busbars.

Advantages

- Quick and easy installation
- Ideal for on site modifications
- Allows for excellent electrical contact
- Terminal has visible indication of tightening torque

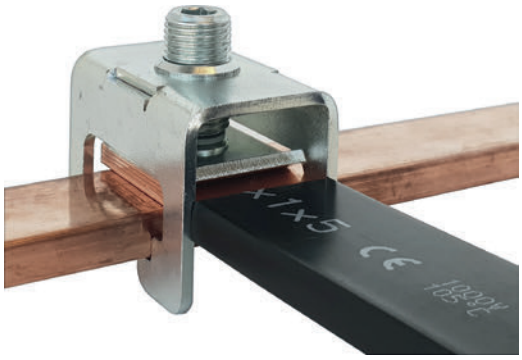









	MFC30-32	MFC40-32	MFC40-50	MFC50-50
	MFC3010E32	MFC4010E32	MFC4010E50	MFC5010E50
Mounting Cu busbar (mm)	30x5-10	40x5-10	40x5-10	50x5-10
For Moflex width (mm)	9-32	9-32	9-50	9-50
Moflex max. layers	10	10	10	10
Technical data				
Nominal voltage AC / DC (V)	1000	1000	1000	1000
Width / Height / Length (mm)	40 / 49 / 57	40 / 49 / 67	58 / 49 / 67	58 / 49 / 77
Screw, hexagonal key (AV)	No. 8	No. 8	No. 8	No. 8
Tightening torque (Nm)	30	30	35	35
Weight (g)	200	225	275	310
Package (pcs)	3	3	3	3

Dimensions

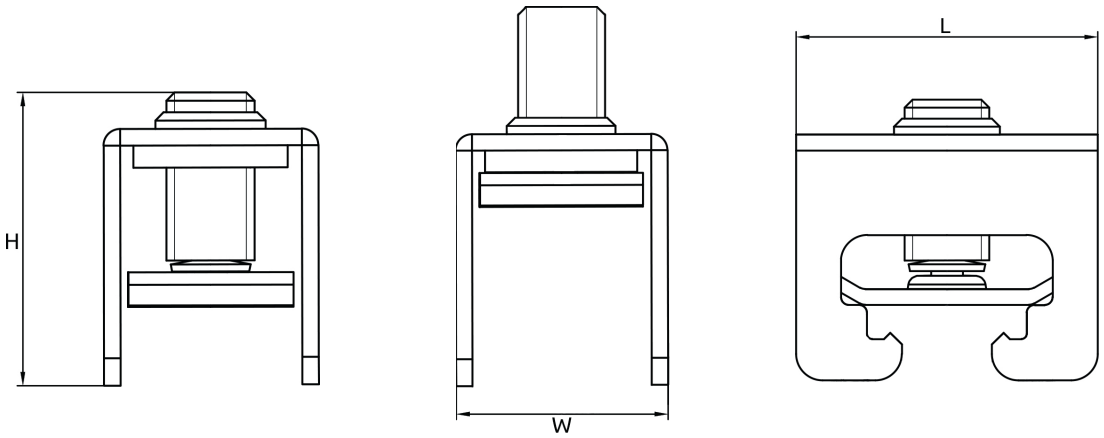

Sealing and edge protection profiles

Wide range of sealing and edge protection profiles

Custom made profiles available for special applications:

- Low-friction coating
- Hygiene profiles

Profiles in pre-cut lengths of your choice



RoHS
MADE IN EU



Edge protection profiles protect transition edges (e.g., cable tray or cabinet racks). They feature a PVC body and come in grey or black. The metal skeleton allows tool-free installation. Two standard versions are available for sheet thicknesses of 1-2mm or 1-4mm, with an operating temperature range of -25°C to +65°C.

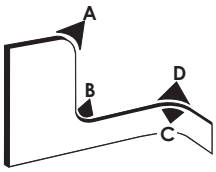





Order code	Color	Clamping range (mm)	The minimum bending radius	Weight (kg)	Package (m)
MCA003AG12	grey	1 - 2	A = 15, B = 15, C = 10, D = 10	7	100
MCA003BG12				0,7	10
MCA002AB12	black	1 - 2	A = 15, B = 15, C = 10, D = 10	7	100
MCA002BB12				0,7	10
MCA015AG12	grey	1 - 4	A = 30, B = 20, C = 20, D = 20	16	100
MCA015BG12				1,6	10
MCA001AB12	black	1 - 4	A = 30, B = 20, C = 20, D = 20	16	100
MCA001BB12				1,6	10

Example of application of sealing and edge protection profiles









Self-gripping sealing profile made with a black PVC carrier with sealing lip or sealing tube from EPDM.
Integrated steel strip core.
Other colors are available on request.



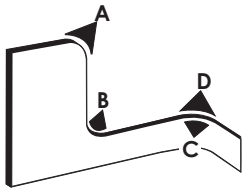

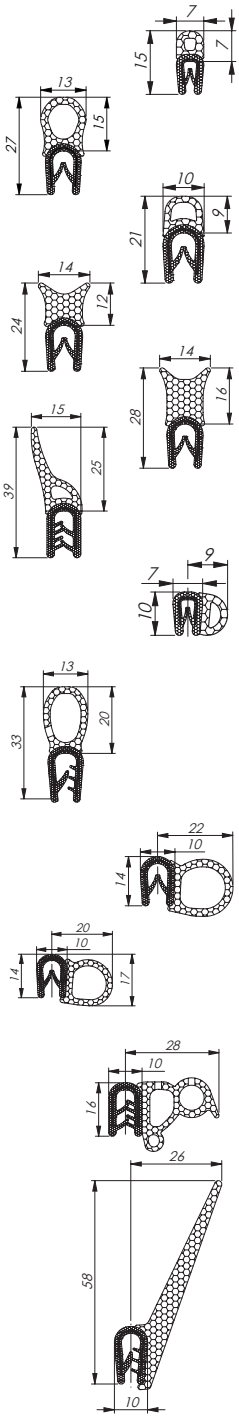

Order code	Color	Clamping range (mm)	The minimum bending radius	Weight (kg/m)	Package (m)
MCC001AB12	black	1 - 2	A = 20, B = 40, C = 10, D = 10	0,08	100
MCC002AB12	black	1 - 4	A = 60, B = 80, C = 20, D = 20	0,265	50
MCC007AB12	black	1 - 4	A = 70, B = 80, C = 15, D = 15	0,17	50
MCC011AB12	black	1 - 4	A = 50, B = 150, C = 50, D = 50	0,218	50
MCC012AB12	black	1 - 4	A = 50, B = 150, C = 50, D = 50	0,085	50
MCC013AB12	black	1,5 - 3,5	A = 80, B = 150, C = 30, D = 30	0,257	50
MCB005AB12	black	1 - 2	A = 20, B = 15, C = 30, D = 30	0,085	100
MCC008AB12	black	1 - 2,5	A = 80, B = 100, C = 20, D = 20	0,2306	50
MCC009AB12		2 - 4		0,24	
MCC010AB12		4 - 6		0,224	
MCB004AB12	black	1 - 4	A = 50, B = 30, C = 100, D = 120	0,2	50
MCB002AB12	black	1 - 4	A = 60, B = 50, C = 120, D = 120	0,265	50
MCB011AB12	black	1 - 2,5	A = 80, B = 80, C = 140, D = 140	0,22	50
MCB012AB12		2,5 - 4		0,28	
MCB013AB12		4 - 6	A = 80, B = 80, C = 140, D = 140 Min. 1000 m / order	0,31	
MCB038AB12	black	1 - 2,5	A = 80, B = -, C = 120, D = 120	0,412	25
MCC004AB12		2,5 - 4		0,352	
MCC005AB12		4 - 6		0,352	

Self-gripping sealing profile with a black EPDM rubber carrier and a sealing lip and / or sealing tube from sponge-rubber. Integrated steel strip core or steel wire core.



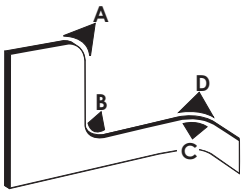

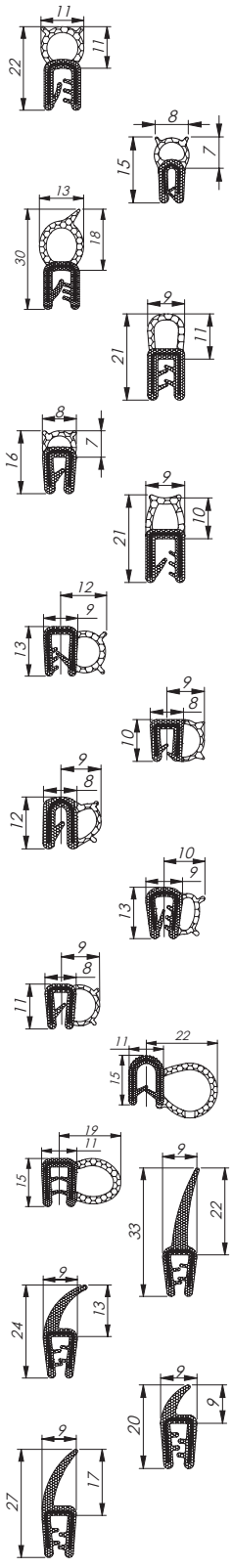

Order code	Color	Clamping range (mm)	The minimum bending radius	Weight (kg/m)	Package (m)
MCC014AB12	black	1 - 3	A = 50, B = 180, C = 30, D = 30	0,145	100
MCC017AB12	black	0,5 - 1,5	A = 50, B = 80, C = 25, D = 25	0,089	100
MCC019AB12	black	1 - 2,5	A = 100, B = 180, C = 25, D = 25	0,17	100
MCC020AB12		2,5 - 4		0,2	100
MCC021AB12	black	1 - 2,5	A = 60, B = 120, C = 25, D = 25	0,19	100
MCC023AB12	black	1 - 2	A = 50, B = 60, C = 20, D = 20	0,14	100
MCC024AB12	black	1 - 3	A = 50, B = 200, C = 25, D = 25	0,14	50
MCB019AB12	black	2	A = 50, B = 20, C = 120, D = 40	0,1293	100
MCB022AB12	black	1 - 2,5	A = 20, B = 50, C = 20, D = 60	0,1	100
MCB025AB12	black	0,8 - 2,5	A = 40, B = 40, C = 100, D = 60	0,13	100
MCB026AB12	black	2	A = 30, B = 40, C = 30, D = 60	0,13	100
MCB032AB12	black	1 - 2	A = 100, B = 200, C = 100, D = 60	0,113	100
MCB021AB12	black	1 - 3,5	A = 200, B = 80, C = 200, D = 200	0,265	50
MCB030AB12	black	1,5 - 3	A = 80, B = 60, C = 200, D = 80	0,182	4 x 25
MCC016AB12	black	1 - 2,5	A = 150, B = 250, C = 20, D = 20	0,176	50
MCC018AB12	black	1 - 2,5	A = 60, B = 250, C = 25, D = 70	0,18	3 x 50
MCC022AB12	black	1 - 2	A = 60, B = 200, C = 20, D = 20	0,184	100
MCC025AB12	black	1 - 3	A = 80, B = 250, C = 25, D = 60	0,184	100

Plastic cable glands

IP68

Polyamide

- Vibration- and UV-resistant
- Halogen-free
- Easy to assemble



Technical specifications

Material

- Cap nut and gland body: polyamide PA6 V2
- Sealing ring: TPV

Properties

- Connection thread: metric (EN 60423) / PG (DIN 40430)
- Protection class: IP68 at up to 5 bar
- Temperature range: -20 °C +100 °C; -30 °C +150 °C (short term)
- Vibration resistance
- UV resistance
- Easy to assemble
- Halogen free

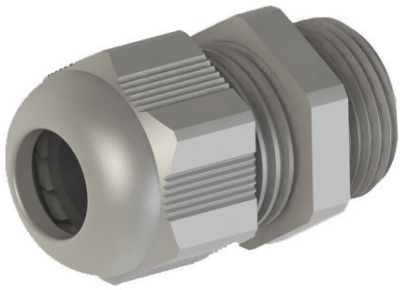

Order code	Thread (AG)	Color	Shade	Dimensions (mm) H	Dimensions (mm) GL	Hex (mm)	Cable diameter (mm)	Weight (g)	Package (pcs)
MBP2ST12L0	M 12 x 1,5	Grey	RAL 7035	24	8	15	3-6,5	3,5	100
MBP2ST12G0		Grey	RAL 7001						
MBP2ST12B0		Black	RAL 9005						
MBP2ST16L0	M 16 x 1,5	Grey	RAL 7035	28	8	19	4-8	5,85	100
MBP2ST16G0		Grey	RAL 7001						
MBP2ST16B0		Black	RAL 9005						
MBP2ST16L1	M 16 x 1,5	Grey	RAL 7035	29	10	22	5-10	8,15	100
MBP2ST16G1		Grey	RAL 7001						
MBP2ST16B1		Black	RAL 9005						
MBP2ST20L0	M 20 x 1,5	Grey	RAL 7035	29	10	24	6-12	10,35	100
MBP2ST20G0		Grey	RAL 7001						
MBP2ST20B0		Black	RAL 9005						
MBP2ST20L1	M 20 x 1,5	Grey	RAL 7035	29	10	24	4-10	10,55	100
MBP2ST20G1		Grey	RAL 7001						
MBP2ST20B1		Black	RAL 9005						
MBP2ST20L2	M 20 x 1,5	Grey	RAL 7035	33	10	27	10-14	13,11	100
MBP2ST20G2		Grey	RAL 7001						
MBP2ST20B2		Black	RAL 9005						
MBP2ST25L0	M 25 x 1,5	Grey	RAL 7035	38	10	33	13-18	21	50
MBP2ST25G0		Grey	RAL 7001						
MBP2ST25B0		Black	RAL 9005						
MBP2ST32L0	M 32 x 1,5	Grey	RAL 7035	41	10	42	18-25	36,4	25
MBP2ST32G0		Grey	RAL 7001						
MBP2ST32B0		Black	RAL 9005						
MBP2ST40L0	M 40 x 1,5	Grey	RAL 7035	51	10	53	22-32	66,45	10
MBP2ST40G0		Grey	RAL 7001						
MBP2ST40B0		Black	RAL 9005						
MBP2ST50L0	M 50 x 1,5	Grey	RAL 7035	53	18	60	30-38	88,11	5
MBP2ST50G0		Grey	RAL 7001						
MBP2ST50B0		Black	RAL 9005						
MBP2ST63L0	M 63 x 1,5	Grey	RAL 7035	55	18	70	34-44	98	5
MBP2ST63G0		Grey	RAL 7001						
MBP2ST63B0		Black	RAL 9005						

Order code	Thread (AG)	Color	Shade	Dimensions (mm) H	Dimensions (mm) GL	Hex (mm)	Cable diameter (mm)	Weight (g)	Package (pcs)
MBP1ST07L0	PG 7	Grey	RAL 7035	24	8	15	3-6,5	3,6	100
MBP1ST07G0		Grey	RAL 7001						
MBP1ST07B0		Black	RAL 9005						
MBP1ST09L0	PG 9	Grey	RAL 7035	28	8	19	4-8	5,8	100
MBP1ST09G0		Grey	RAL 7001						
MBP1ST09B0		Black	RAL 9005						
MBP1ST11L0	PG 11	Grey	RAL 7035	29	8	22	5-10	7,8	100
MBP1ST11G0		Grey	RAL 7001						
MBP1ST11B0		Black	RAL 9005						
MBP1ST13L0	PG 13,5	Grey	RAL 7035	29	9	24	6-12	9,1	100
MBP1ST13G0		Grey	RAL 7001						
MBP1ST13B0		Black	RAL 9005						
MBP1ST13L1	PG 13,5	Grey	RAL 7035	29	9	24	4-10	9,3	100
MBP1ST13G1		Grey	RAL 7001						
MBP1ST13B1		Black	RAL 9005						
MBP1ST16L0	PG 16	Grey	RAL 7035	33	9	27	10-14	12	100
MBP1ST16G0		Grey	RAL 7001						
MBP1ST16B0		Black	RAL 9005						
MBP1ST21L0	PG 21	Grey	RAL 7035	38	11	33	13-18	19,6	50
MBP1ST21G0		Grey	RAL 7001						
MBP1ST21B0		Black	RAL 9005						
MBP1ST29L0	PG 29	Grey	RAL 7035	41	11	42	18-25	32,7	25
MBP1ST29G0		Grey	RAL 7001						
MBP1ST29B0		Black	RAL 9005						
MBP1ST36L0	PG 36	Grey	RAL 7035	51	13	53	22-32	65,5	10
MBP1ST36G0		Grey	RAL 7001						
MBP1ST36B0		Black	RAL 9005						
MBP1ST42L0	PG 42	Grey	RAL 7035	53	13	60	30-38	78,3	5
MBP1ST42G0		Grey	RAL 7001						
MBP1ST42B0		Black	RAL 9005						
MBP1ST48L0	PG 48	Grey	RAL 7035	55	14	65	34-44	89,1	5
MBP1ST48G0		Grey	RAL 7001						
MBP1ST48B0		Black	RAL 9005						

Dimensions

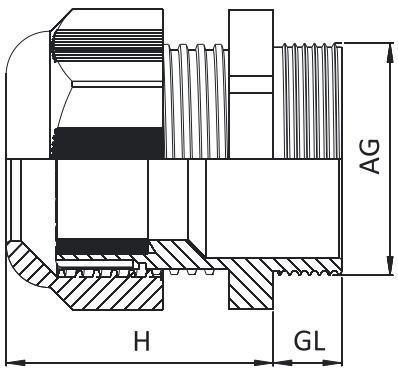

Technical specifications

Material

- Cap nut and gland body: polyamide PA6 V2
- Sealing ring: TPV

Properties

- Connection thread: metric (EN 60423) / PG (DIN 40430)
- Protection class: IP68 at up to 5 bar
- Temperature range: -20 °C +100 °C; -30 °C +150 °C (short term)
- Vibration resistance
- UV resistance
- Easy to assemble
- Halogen free

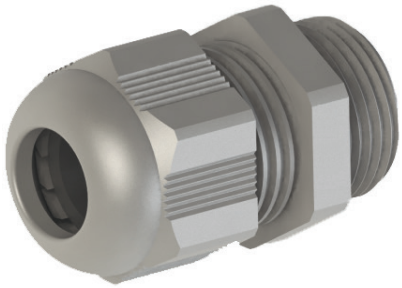

Order code	Thread (AG)	Color	Shade	Dimensions (mm) H	Dimensions (mm) GL	Hex (mm)	Cable diameter (mm)
MBP2LT12L0	M 12 x 1,5	Grey	RAL 7035	24	15	15	3-6,5
MBP2LT12G0		Grey	RAL 7001				
MBP2LT12B0		Black	RAL 9005				
MBP2LT16L0	M 16 x 1,5	Grey	RAL 7035	29	15	22	4-8
MBP2LT16G0		Grey	RAL 7001				
MBP2LT16B0		Black	RAL 9005				
MBP2LT16L1	M 16 x 1,5	Grey	RAL 7035	28	15	19	5-10
MBP2LT16G1		Grey	RAL 7001				
MBP2LT16B1		Black	RAL 9005				
MBP2LT20L0	M 20 x 1,5	Grey	RAL 7035	29	15	24	6-12
MBP2LT20G0		Grey	RAL 7001				
MBP2LT20B0		Black	RAL 9005				
MBP2LT20L1	M 20 x 1,5	Grey	RAL 7035	29	15	24	4-10
MBP2LT20G1		Grey	RAL 7001				
MBP2LT20B1		Black	RAL 9005				
MBP2LT20L2	M 20 x 1,5	Grey	RAL 7035	33	15	27	10-14
MBP2LT20G2		Grey	RAL 7001				
MBP2LT20B2		Black	RAL 9005				
MBP2LT25L0	M 25 x 1,5	Grey	RAL 7035	38	15	33	13-18
MBP2LT25G0		Grey	RAL 7001				
MBP2LT25B0		Black	RAL 9005				
MBP2LT32L0	M 32 x 1,5	Grey	RAL 7035	41	18	42	18-25
MBP2LT32G0		Grey	RAL 7001				
MBP2LT32B0		Black	RAL 9005				
MBP2LT40L0	M 40 x 1,5	Grey	RAL 7035	51	18	53	22-32
MBP2LT40G0		Grey	RAL 7001				
MBP2LT40B0		Black	RAL 9005				

Order code	Thread (AG)	Color	Shade	Dimensions (mm) H	Dimensions (mm) GL	Hex (mm)	Cable diameter (mm)
MBP1LT07L0	PG 7	Grey	RAL 7035	24	15	15	3-6,5
MBP1LT07G0		Grey	RAL 7001				
MBP1LT07B0		Black	RAL 9005				
MBP1LT09L0	PG 9	Grey	RAL 7035	28	15	19	4-8
MBP1LT09G0		Grey	RAL 7001				
MBP1LT09B0		Black	RAL 9005				
MBP1LT11L0	PG 11	Grey	RAL 7035	29	15	22	5-10
MBP1LT11G0		Grey	RAL 7001				
MBP1LT11B0		Black	RAL 9005				
MBP1LT11L1	PG 11	Grey	RAL 7035	29	10	22	5-10
MBP1LT11G1		Grey	RAL 7001				
MBP1LT11B1		Black	RAL 9005				
MBP1LT13L0	PG 13,5	Grey	RAL 7035	29	15	24	6-12
MBP1LT13G0		Grey	RAL 7001				
MBP1LT13B0		Black	RAL 9005				
MBP1LT13L1	PG 13,5	Grey	RAL 7035	29	15	24	4-10
MBP1LT13G1		Grey	RAL 7001				
MBP1LT13B1		Black	RAL 9005				
MBP1LT16L0	PG 16	Grey	RAL 7035	33	15	27	10-14
MBP1LT16G0		Grey	RAL 7001				
MBP1LT16B0		Black	RAL 9005				
MBP1LT21L0	PG 21	Grey	RAL 7035	38	15	33	13-18
MBP1LT21G0		Grey	RAL 7001				
MBP1LT21B0		Black	RAL 9005				

Dimensions

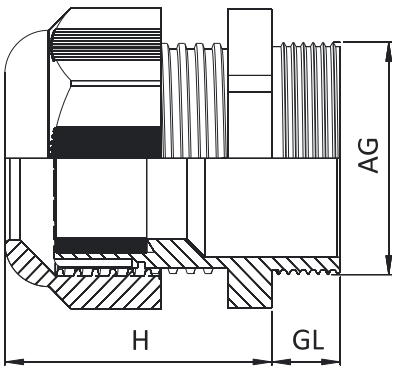

Technical specifications

Material

- Cap nut and gland body: polyamide PA6 V2
- Hexagonal lock nut: polyamide PA6 V2 + 30% GF
- Sealing ring: TPV
- O-ring: NBR

Properties

- Connection thread: metric (EN 60423) / PG (DIN 40430)
- Protection class: IP68 at up to 5 bar
- Temperature range: -20 °C +100 °C; -30 °C +150 °C (short term)
- Vibration resistance
- UV resistance
- Easy to assemble
- Halogen free



Order code	Thread (AG)	Color	Shade	Dimensions (mm) H	Dimensions (mm) GL	Hex (mm)	Cable diameter (mm)	Weight (g)	Package (pcs)
MBP2SS12L0	M 12 x 1,5	Grey	RAL 7035	24	8	15	3-6,5	5	100
MBP2SS16L0	M 16 x 1,5	Grey	RAL 7035	28	8	19	4-8	7	100
MBP2SS16L1	M 16 x 1,5	Grey	RAL 7035	29	10	22	5-10	10	100
MBP2SS20L0	M 20 x 1,5	Grey	RAL 7035	29	10	24	6-12	13	100
MBP2SS20L1	M 20 x 1,5	Grey	RAL 7035	29	10	24	4-10	13	100
MBP2SS20L2	M 20 x 1,5	Grey	RAL 7035	33	10	27	10-14	15	100
MBP2SS25L0	M 25 x 1,5	Grey	RAL 7035	38	10	33	13-18	24	50
MBP2SS32L0	M 32 x 1,5	Grey	RAL 7035	41	10	42	18-25	43	25
MBP2SS40L0	M 40 x 1,5	Grey	RAL 7035	51	10	53	22-32	78	10
MBP2SS50L0	M 50 x 1,5	Grey	RAL 7035	53	18	60	30-38	101	5
MBP2SS63L0	M 63 x 1,5	Grey	RAL 7035	55	18	70	34-44	116	5

Order code	Thread (AG)	Color	Shade	Dimensions (mm) H	Dimensions (mm) GL	Hex (mm)	Cable diameter (mm)	Weight (g)	Package (pcs)
MBP1SS07L0	PG 7	Grey	RAL 7035	24	8	15	3-6,5	5	100
MBP1SS09L0	PG 9	Grey	RAL 7035	28	8	19	4-8	7	100
MBP1SS11L0	PG 11	Grey	RAL 7035	29	8	22	5-10	10	100
MBP1SS13L0	PG 13,5	Grey	RAL 7035	29	9	24	6-12	12	100
MBP1SS13L1	PG 13,5	Grey	RAL 7035	29	9	24	4-10	12	100
MBP1SS16L0	PG 16	Grey	RAL 7035	33	9	27	10-14	15	100
MBP1SS21L0	PG 21	Grey	RAL 7035	38	11	33	13-18	24	50
MBP1SS29L0	PG 29	Grey	RAL 7035	41	11	42	18-25	39	25
MBP1SS36L0	PG 36	Grey	RAL 7035	51	13	53	22-32	80	10
MBP1SS42L0	PG 42	Grey	RAL 7035	53	13	60	30-38	94	5
MBP1SS48L0	PG 48	Grey	RAL 7035	55	14	65	34-44	107	5

Dimensions

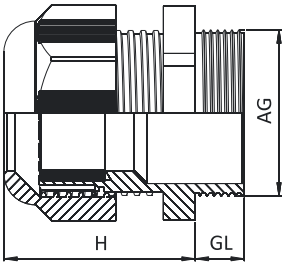

Technical specifications

Material

- Cap nut and gland body: polyamide PA6 V2
- Sealing ring: TPV special seal for bend resistance

Properties

- Connection thread: metric (EN 60423) / PG (DIN 40430)
- Protection class: IP68 at up to 5 bar
- Temperature range: -20 °C +100 °C; -30 °C +150 °C (short term)
- With spiral top for bend protection
- For highly movable flexible cables
- Vibration resistance
- UV resistance
- Easy to assemble
- Halogen free



Order code	Thread (AG)	Color	Shade	Dimensions (mm) H	Dimensions (mm) GL	Hex (mm)	Cable diameter (mm)	Weight (g)	Package (pcs)
MBP2BR12L0	M 12 x 1,5	Grey	RAL 7035	57	8	15	3-6,5	4,4	100
MBP2BR16L0	M 16 x 1,5	Grey	RAL 7035	70	8	19	4-8	7,8	100
MBP2BR16L1	M 16 x 1,5	Grey	RAL 7035	81	10	22	5-10	11,3	50
MBP2BR20L0	M 20 x 1,5	Grey	RAL 7035	89	10	24	6-12	14,9	50
MBP2BR20L1	M 20 x 1,5	Grey	RAL 7035	107	10	27	10-14	20,1	50
MBP2BR25L0	M 25 x 1,5	Grey	RAL 7035	124	10	33	13-18	34,8	25

Order code	Thread (AG)	Color	Shade	Dimensions (mm) H	Dimensions (mm) GL	Hex (mm)	Cable diameter (mm)	Weight (g)	Package (pcs)
MBP1BR07L0	PG 7	Grey	RAL 7035	57	8	15	3-6,5	4,2	100
MBP1BR09L0	PG 9	Grey	RAL 7035	70	8	19	4-8	7,4	100
MBP1BR11L0	PG 11	Grey	RAL 7035	81	8	22	5-10	10,8	50
MBP1BR13L0	PG 13,5	Grey	RAL 7035	89	9	24	6-12	14	50
MBP1BR16L0	PG 16	Grey	RAL 7035	107	9	27	10-14	20,5	50
MBP1BR21L0	PG 21	Grey	RAL 7035	124	11	33	13-18	33,7	25

Dimensions

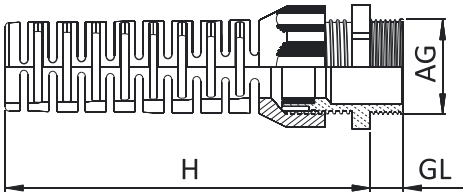

Technical specifications

Material

- Blind stop: polyamide PA6 V2
- Sealing ring: NBR (on request)

Properties

- For unused threaded holes
- Connection thread: metric (EN 60423) / PG (DIN 40430)
- Protection class: IP54 / IP68 (with o-ring)
- Temperature range: -20 °C +100 °C; -30 °C +150 °C (short term)
- UV resistance
- Halogen free



Order code	Thread (AG)	Color	Shade	Dimensions (mm)			Weight (g)	Package (pcs)
				H	GL	D		
MBP2BS12L0	M 12 x 1,5	Grey	RAL 7035	8,5	6	15	0,66	1000
MBP2BS16L0	M 16 x 1,5	Grey	RAL 7035	10	7	20	1,27	1000
MBP2BS20L0	M 20 x 1,5	Grey	RAL 7035	10	7	24	1,75	500
MBP2BS25L0	M 25 x 1,5	Grey	RAL 7035	14	10	30	3,55	300
MBP2BS32L0	M 32 x 1,5	Grey	RAL 7035	14	10	37	4,85	200
MBP2BS40L0	M 40 x 1,5	Grey	RAL 7035	15	10	48	9,11	100

Order code	Thread (AG)	Color	Shade	Dimensions (mm)			Weight (g)	Package (pcs)
				H	GL	D		
MBP1BS07L0	PG 7	Grey	RAL 7035	8	6	15	0,66	1000
MBP1BS09L0	PG 9	Grey	RAL 7035	8,2	6	19	0,9	1000
MBP1BS11L0	PG 11	Grey	RAL 7035	8,5	6	22	1,27	500
MBP1BS13L0	PG 13,5	Grey	RAL 7035	8,5	6	25	1,44	500
MBP1BS16L0	PG 16	Grey	RAL 7035	8,5	6	27	1,75	500
MBP1BS21L0	PG 21	Grey	RAL 7035	12	8	33	3,55	300
MBP1BS29L0	PG 29	Grey	RAL 7035	11,3	8	44	4,85	200
MBP1BS36L0	PG 36	Grey	RAL 7035	14,3	10	55	9,11	100

Dimensions

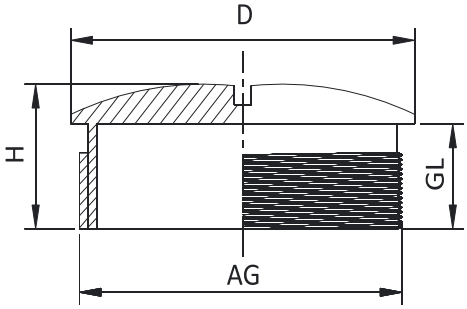

Technical specifications

Material

- Hexagonal lock nut: polyamide PA6 V2 + 30% GF
- Connection thread: metric (EN 60423) / PG (DIN 40430)

Properties

- For tightening of cable glands
- Temperature range: -20 °C +100 °C; -30 °C +150 °C (short term)
- UV resistance
- Halogen free

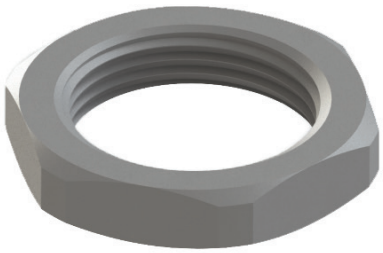

Order code	Thread (AG)	Color	Shade	Dimensions (mm) H	Hex (mm)	Weight (g)	Package (pcs)
MBP2LS12L0	M 12 x 1,5	Grey	RAL 7035	5	18	1,05	1000
MBP2LS12G0		Grey	RAL 7001				
MBP2LS12B0		Black	RAL 9005				
MBP2LS16L0	M 16 x 1,5	Grey	RAL 7035	5	22	1,3	1000
MBP2LS16G0		Grey	RAL 7001				
MBP2LS16B0		Black	RAL 9005				
MBP2LS20L0	M 20 x 1,5	Grey	RAL 7035	6	26	2	500
MBP2LS20G0		Grey	RAL 7001				
MBP2LS20B0		Black	RAL 9005				
MBP2LS25L0	M 25 x 1,5	Grey	RAL 7035	6	32	3	500
MBP2LS25G0		Grey	RAL 7001				
MBP2LS25B0		Black	RAL 9005				
MBP2LS32L0	M 32 x 1,5	Grey	RAL 7035	7	41	5,86	200
MBP2LS32G0		Grey	RAL 7001				
MBP2LS32B0		Black	RAL 9005				
MBP2LS40L0	M 40 x 1,5	Grey	RAL 7035	7	50	11	100
MBP2LS40G0		Grey	RAL 7001				
MBP2LS40B0		Black	RAL 9005				
MBP2LS50L0	M 50 x 1,5	Grey	RAL 7035	8	60	13	75
MBP2LS50G0		Grey	RAL 7001				
MBP2LS50B0		Black	RAL 9005				
MBP2LS63L0	M 63 x 1,5	Grey	RAL 7035	8	75	17,5	50
MBP2LS63G0		Grey	RAL 7001				
MBP2LS63B0		Black	RAL 9005				

Order code	Thread (AG)	Color	Shade	Dimensions (mm) H	Hex (mm)	Weight (g)	Package (pcs)
MBP1LS07L0	PG 7	Grey	RAL 7035	5	19	1,2	1000
MBP1LS07G0		Grey	RAL 7001				
MBP1LS07B0		Black	RAL 9005				
MBP1LS09L0	PG 9	Grey	RAL 7035	5	22	1,2	1000
MBP1LS09G0		Grey	RAL 7001				
MBP1LS09B0		Black	RAL 9005				
MBP1LS09L1	PG 9	Grey	RAL 7035	5	19	1,2	1000
MBP1LS09G1		Grey	RAL 7001				
MBP1LS09B1		Black	RAL 9005				
MBP1LS11L0	PG 11	Grey	RAL 7035	5	24	1,5	1000
MBP1LS11G0		Grey	RAL 7001				
MBP1LS11B0		Black	RAL 9005				
MBP1LS13L0	PG 13,5	Grey	RAL 7035	6	27	2,37	500
MBP1LS13G0		Grey	RAL 7001				
MBP1LS13B0		Black	RAL 9005				
MBP1LS16L0	PG 16	Grey	RAL 7035	6	30	3	500
MBP1LS16G0		Grey	RAL 7001				
MBP1LS16B0		Black	RAL 9005				
MBP1LS21L0	PG 21	Grey	RAL 7035	7	36	4,5	250
MBP1LS21G0		Grey	RAL 7001				
MBP1LS21B0		Black	RAL 9005				
MBP1LS29L0	PG 29	Grey	RAL 7035	7	46	6,21	200
MBP1LS29G0		Grey	RAL 7001				
MBP1LS29B0		Black	RAL 9005				
MBP1LS36L0	PG 36	Grey	RAL 7035	8	60	14	100
MBP1LS36G0		Grey	RAL 7001				
MBP1LS36B0		Black	RAL 9005				
MBP1LS42L0	PG 42	Grey	RAL 7035	8	65	15	50
MBP1LS42G0		Grey	RAL 7001				
MBP1LS42B0		Black	RAL 9005				
MBP1LS48L0	PG 48	Grey	RAL 7035	8	70	18	50
MBP1LS48G0		Grey	RAL 7001				
MBP1LS48B0		Black	RAL 9005				

Dimensions

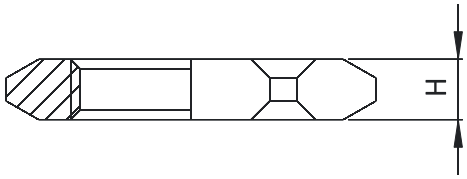

Technical specifications

Material

- Polyamide PA6
- Temperature range: -20 °C +100 °C
- For blinding and sealing already installed cable glands



Order code	PG Thread	M Thread	Color	Shade	Weight (g)	Package (pcs)
MBP0PT07B0	PG 7	M 12 x 1,5	Black	RAL 9005	0,2	1000
MBP0PT09B0	PG 9	M 16 x 1,5	Black	RAL 9005	0,6	1000
MBP0PT11B0	PG 11	M 16 x 1,5	Black	RAL 9005	0,8	1000
MBP0PT13B0	PG 13,5	M 20 x 1,5	Black	RAL 9005	1,4	500
MBP0PT16B0	PG 16	M 20 x 1,5	Black	RAL 9005	1,8	500
MBP0PT21B0	PG 21	M 25 x 1,5	Black	RAL 9005	2,6	250
MBP0PT29B0	PG 29	M 32 x 1,5	Black	RAL 9005	4,8	200
MBP0PT36B0	PG 36	M 40 x 1,5	Black	RAL 9005	8,6	100
MBP0PT42B0	PG 42	M 50 x 1,5	Black	RAL 9005	10,6	50
MBP0PT48B0	PG 48	M 63 x 1,5	Black	RAL 9005	13,8	50

NB! The gland sizes are given for plastic cable glands. In case of using metal cable glands, the protection tap has to be **one size smaller** *than indicated above!*

O-rings for cable glands

Technical specifications

Material

- NBR (70 sh)
- Temperature range: -30 °C +100 °C



Order code	Thread	Inner diameter (mm)	Height (mm)	Weight (g)	Package (pcs)
MBP1OR07B0	PG 7 / M 12	9	1,5	5	1000
MBP1OR09B0	PG 9 / M 16	11	1,5	9	1000
MBP1OR11B0	PG 11	13	1,5	10	1000
MBP1OR16B0	PG 16	18	1,5	13	1000
MBP1OR21B0	PG 21 / M 32	22	2	29	1000
MBP1OR36B0	PG 36 / M50	40	2	50	300
MBP1OR42B0	PG 42	48	2	62	100
MBP2OR20B0	M 20 / PG 13,5	16	15	12	1000
MBP2OR25B0	M 25	19	2	30	1000
MBP2OR40B0	M 40 / PG 29	23	2	37	300
MBP2OR63B0	M 63 / PG 48	53	2	72	100

Metal cable glands

IP68

Brass, stainless steel, EMC

- Vibration- and UV-resistant
- Heavy duty
- Easy to assemble



Technical specifications

Material

- Cap nut and gland body: nickel-plated brass
- Clamping insert: polyamide PA6 V2
- Sealing ring: TPV
- O-ring: NBR

Properties

- Connection thread: metric (EN 60423) / PG (DIN 40430)
- Protection class: IP68 at up to 5 bar
- Temperature range: -20 °C +100 °C; -40 °C +150 °C (short term)
- Easy to assemble
- Long thread versions available
- High strain relief



Order code	Thread (AG)	Dimensions (mm)		Hex B (mm)	Hex C (mm)	Cable diameter (mm)	Weight (g)	Package (pcs)
		H	GL					
MBM2ST12E0	M 12 x 1,5	22	6	14	14	3-6,5	12	100
MBM2ST16E0	M 16 x 1,5	23	7	18	17	4-8	18,4	50
MBM2ST20E0	M 20 x 1,5	26,5	8	22	22	6-12	29,2	50
MBM2ST20E1	M 20 x 1,5	26,5	8	22	22	4-10	30,05	50
MBM2ST25E0	M 25 x 1,5	28	8	27	24	10-14	36	25
MBM2ST32E0	M 32 x 1,5	31,5	9	34	30	13-18	67	20
MBM2ST40E0	M 40 x 1,5	38	9	43	40	18-25	138,6	10
MBM2ST50E0	M 50 x 1,5	43	9	55	50	22-32	231,4	5
MBM2ST63E0	M 63 x 1,5	48	14	68	64	33-44	414,4	5

Order code	Thread (AG)	Dimensions (mm)		Hex (mm)	Cable diameter (mm)	Weight (g)	Package (pcs)
		H	GL				
MBM1ST07E0	PG 7	22	6	14	3-6,5	11,8	100
MBM1ST09E0	PG 9	23	6	17	4-8	16,6	50
MBM1ST11E0	PG 11	24,5	6	20	5-10	23,2	50
MBM1ST13E0	PG 13,5	26,5	6,5	22	6-12	29,6	50
MBM1ST13E1	PG 13,5	26,5	6,5	22	4-10	29,8	50
MBM1ST16E0	PG 16	28	6,5	24	10-14	31,6	50
MBM1ST21E0	PG 21	31,5	7	30	13-18	55	25
MBM1ST29E0	PG 29	38	8	40	18-25	115,6	20
MBM1ST36E0	PG 36	43	10	50	22-32	198,4	10
MBM1ST42E0	PG 42	47	12	57	30-38	231,8	5
MBM1ST48E0	PG 48	48	14	64	33-44	344,8	5

Dimensions

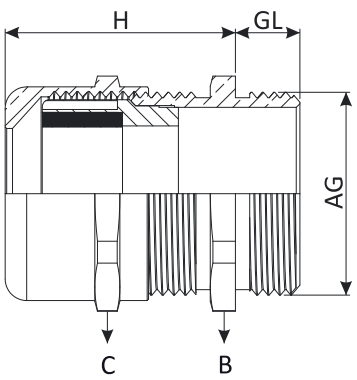

Technical specifications

Material

- Cap nut and gland body: stainless steel (1.4305 / AISI303)
- Clamping insert: polyamide PA6 V2
- Sealing ring: TPV
- O-ring: NBR

Properties

- Connection thread: metric (EN60423) / PG (DIN 40430)
- Protection class: IP68 - 5 bar
- Temperature range: -20 °C +100 °C; -40 °C +150 °C (short term)
- High corrosion resistance
- Smooth surfaces
- Easy to assemble
- Food, pharmaceutical industry and on-/offshore applications



Order code	Thread (AG)	Dimensions (mm) H	Dimensions (mm) GL	Hex B (mm)	Hex C (mm)	Cable diameter (mm)	Weight (g)	Package (pcs)
MBS2ST12E0	M 12 x 1,5	22	6	14	14	3-6,5	12,5	100
MBS2ST16E0	M 16 x 1,5	23	7	18	17	4-8	18,5	50
MBS2ST20E0	M 20 x 1,5	26,5	8	22	22	6-12	26	50
MBS2ST20E1	M 20 x 1,5	26,5	8	22	22	4-10	26,2	50
MBS2ST25E0	M 25 x 1,5	28	8	27	24	10-14	41	25
MBS2ST32E0	M 32 x 1,5	31,5	9	36	30	13-18	70	20
MBS2ST40E0	M 40 x 1,5	38	9	46	41	18-25	144,5	10
MBS2ST50E0	M 50 x 1,5	43	9	55	50	22-32	255	5
MBS2ST63E0	M 63 x 1,5	48	14	70	65	33-44	395,6	5

Order code	Thread (AG)	Dimensions (mm) H	Dimensions (mm) GL	Hex (mm)	Cable diameter (mm)	Weight (g)	Package (pcs)
MBS1ST07E0	PG 7	22	6	14	3-6,5	12,5	100
MBS1ST09E0	PG 9	23	6	17	4-8	16,6	50
MBS1ST11E0	PG 11	24,5	6	22	5-10	23,2	50
MBS1ST13E0	PG 13,5	26,5	6,5	22	6-12	29,6	50
MBS1ST13E1	PG 13,5	26,5	6,5	22	4-10	29,8	50
MBS1ST16E0	PG 16	28	6,5	24	10-14	31,6	50
MBS1ST21E0	PG 21	31,5	7	30	13-18	55	25
MBS1ST29E0	PG 29	38	8	41	18-25	115,6	20
MBS1ST36E0	PG 36	43	10	50	22-32	145	10
MBS1ST42E0	PG 42	47	12	60	30-38	255	5
MBS1ST48E0	PG 48	48	14	65	33-34	345	5

Dimensions

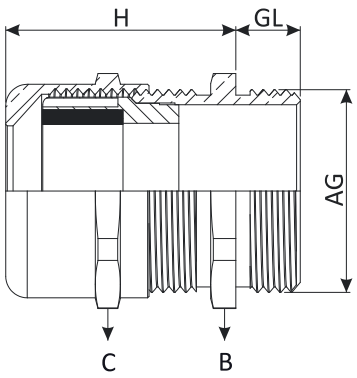

Technical specifications

Material

- Cap nut and gland body: nickel-plated brass
- Sealing ring: TPV / silicone / EPDM
- O-ring: NBR / TPV / silicone / EPDM

Properties

- Connection thread: metric (EN60423) / PG (DIN 40430)
- Protection class: IP68 at up to 3 bar
- Temperature range: -20 °C +100 °C; -40 °C +150 °C
- Easy to assemble
- Long thread versions available
- Lighting industry



Order code	Thread (AG)	Dimensions (mm)		Hex (mm)	Cable diameter (mm)	Package (pcs)
		H	GL			
MBM2MI06E0	M 6 x 1,0	10,5	6	8	2-3	100
MBM2MI08E0	M 8 x 1,25	15	6	14	2-4	100
MBM2MI08E1	M 8 x 1,25	15	6	11	3-5	100
MBM2MI10E0	M 10 x 1,5	15	6	14	2-4	100
MBM2MI10E1	M 10 x 1,5	15	6	14	3-6	100
MBM2MI10E2	M 10 x 1,5	14,5	6	12	4-6	100
MBM2MI12E0	M 12 x 1,5	15	6	14	2-4	100
MBM2MI12E1	M 12 x 1,5	15	6	14	3-6	100
MBM1MI07E0	PG 7	15	6	14	2-4	100
MBM1MI07E1	PG 7	15	6	14	3-6	100
MBM1MI09E0	PG 9	16,5	6	17	4-6	100
MBM1MI09E1	PG 9	16,5	6	17	6-8	100

Dimensions

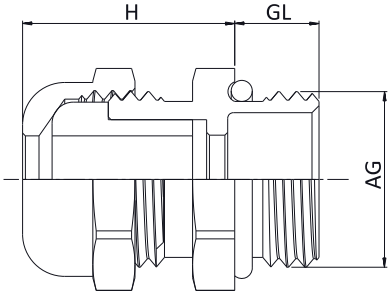

Technical specifications

Material

- Cap nut and gland body: nickel-plated brass
- Clamping insert: polyamide PA6 V2
- Sealing ring: TPV
- EMC spring: AISI301
- O-ring: NBR



Properties

- Connection thread: metric (EN60423) / PG (DIN 40430)
- Protection class: IP68 - 5 bar
- Temperature range: -20 °C +100 °C; -40 °C +150 °C
- Easy to assemble
- For cables with shielding
- Suitable for cables with and without inner sheath
- Highly conductive

Order code	Thread (AG)	Dimensions (mm) H	Dimensions (mm) GL	Hex B (mm)	Hex C (mm)	Cable diameter (mm)	Weight (g)	Package (pcs)
MBM2EC12E0	M 12 x 1,5	22	6	14	14	3-6,5	12,5	100
MBM2EC16E0	M 16 x 1,5	23	7	18	17	4-8	18,5	50
MBM2EC20E0	M 20 x 1,5	26,5	8	22	22	6-12	26,5	50
MBM2EC25E0	M 25 x 1,5	28	8	27	24	10-14	42	25
MBM2EC32E0	M 32 x 1,5	32,5	9	34	30	13-18	72,5	20
MBM2EC40E0	M 40 x 1,5	38	9	43	40	18-25	144,5	10
MBM2EC50E0	M 50 x 1,5	48	9	55	50	22-32	255	5
MBM2EC63E0	M 63 x 1,5	53	14	68	64	34-44	395,5	5

Order code	Thread (AG)	Dimensions (mm) H	Dimensions (mm) GL	Hex (mm)	Cable diameter (mm)	Weight (g)	Package (pcs)
MBM1EC07E0	PG 7	22	6	14	3-6,5	16,5	100
MBM1EC09E0	PG 9	23	6	17	4-8	18,5	50
MBM1EC11E0	PG 11	26	6	20	5-10	25	50
MBM1EC13E0	PG 13,5	26,5	6,5	22	6-12	30	50
MBM1EC16E0	PG 16	28	6,5	24	10-14	37	50
MBM1EC21E0	PG 21	32,5	7	30	13-18	62,5	25
MBM1EC29E0	PG 29	38	8	40	18-25	128	20
MBM1EC36E0	PG 36	48	9	50	22-32	232,5	10
MBM1EC42E0	PG 42	48	12	58	30-38	252,5	5
MBM1EC48E0	PG 48	52	14	64	34-44	355	5

Dimensions

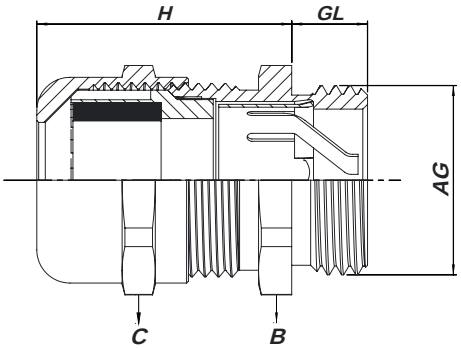

Technical specifications

Material

- Cap nut and gland body: nickel-plated brass
- Sealing ring: EPDM
- O-ring: NBR - TPV

Properties

- Connection thread: metric (EN60423)
- Protection class: IP68
- Temperature range: -20 °C +100 °C; -40 °C +150 °C
- High impact and temperature resistance
- Easy to assemble
- Wide cable range
- XL cables



Order code	Thread (AG)	Dimensions (mm)		Hex B (mm)	Hex C (mm)	Cable diameter (mm)	Weight (g)	Package (pcs)
		H	GL					
MBM2XL63E0	M 63 x 1,5	48	15	70	75	45-55	515	5
MBM2XL75E0	M 75 x 1,5	48	20	85	75	45-55	700	2
MBM2XL75E1	M 75 x 1,5	58	20	90	90	50-63	700	2
MBM2XL80E0	M 80 x 2,0	58	20	90	90	50-63	870	2
MBM2XL90E0	M 90 x 2,0	61	20	100	100	60-70	1109	2
MBM3XL21E0	2 ½"	48	20	85	75	45-55	590,2	2
MBM3XL21E1	2 ½"	58	20	90	90	50-63	950	2
MBM3XL30E0	3"	61	20	100	100	60-70	1093,4	2

Dimensions

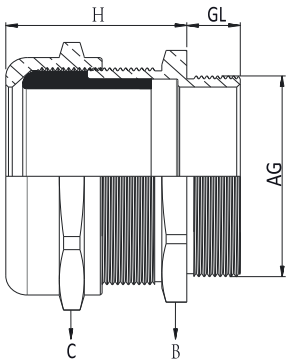

Technical specifications

Material

- Screw plug: nickel-plated brass
- Sealing ring: NBR

Properties

- Connection thread: metric (EN60423) / PG (DIN 40430)
- Protection class: IP68
- Temperature range: -40 °C +100 °C
- For unused threaded holes
- Assembly with a screwdriver
- Machine and equipment manufacturing
- Electric motor manufacturing



Order code	Thread (AG)	Dimensions (mm)			Weight (g)	Package (pcs)
		H	GL	D		
MBM2BS12E0	M 12 x 1,5	7,5	5	14	4,5	100
MBM2BS16E0	M 16 x 1,5	8	5	18	5,3	50
MBM2BS20E0	M 20 x 1,5	9,5	6,5	22	14,5	50
MBM2BS25E0	M 25 x 1,5	11	7	28	17	25
MBM2BS32E0	M 32 x 1,5	12	8	35	24,6	20
MBM2BS40E0	M 40 x 1,5	13	8,5	44	40,4	10
MBM2BS50E0	M 50 x 1,5	15	9	54	56,2	10
MBM2BS63E0	M 63 x 1,5	16	10	67	102,6	5

Order code	Thread (AG)	Dimensions (mm)			Weight (g)	Package (pcs)
		H	GL	D		
MBM1BS07E0	PG 7	8	5	14	3,7	100
MBM1BS09E0	PG 9	9	6	17	5,4	50
MBM1BS11E0	PG 11	9	6	20	7,9	50
MBM1BS13E0	PG 13,5	9,5	6,5	22	9,8	50
MBM1BS16E0	PG 16	9,5	6,5	24	15	50
MBM1BS21E0	PG 21	11	7	30	18,9	25
MBM1BS29E0	PG 29	12	8	39	69,4	20
MBM1BS36E0	PG 36	15	9	50	62,5	10
MBM1BS42E0	PG 42	16	10	57	86,1	5
MBM1BS48E0	PG 48	16	10	64	96,6	5

Dimensions

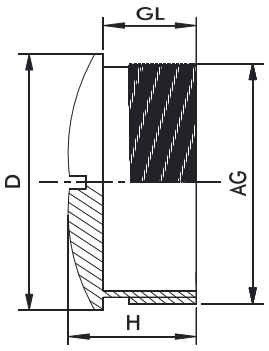

Technical specifications

Material

- Hexagonal locknut: nickel-plated brass
- Connection thread: metric (EN60423) / PG (DIN 40430)
- Temperature range: -60 °C +200 °C

Properties

- For tightening of cable glands



		Dimensions (mm)			
Order code	Thread (AG)	H	Hex (mm)	Weight (g)	Package (pcs)
MBM2LS12E0	M 12 x 1,5	2,8	15	1,6	100
MBM2LS16E0	M 16 x 1,5	3	19	3	50
MBM2LS20E0	M 20 x 1,5	3,5	24	5,4	50
MBM2LS25E0	M 25 x 1,5	3,5	30	8,2	25
MBM2LS32E0	M 32 x 1,5	4	36	10,6	20
MBM2LS40E0	M 40 x 1,5	4	45	16,4	10
MBM2LS50E0	M 50 x 1,5	5	55	26,8	5
MBM2LS63E0	M 63 x 1,5	5	68	37	5
MBM2LS75E0	M 75 x 1,5	7	90	150,4	10
MBM2LS80E0	M 80 x 2,0	7	90	165	10
MBM2LS90E0	M 90 x 2,0	10	100	202	10
MBM3LS21E0	2 ½''	10	80	122,2	5
MBM3LS30E0	3''	10	100	223,4	5

		Dimensions (mm)			
Order code	Thread (AG)	H	Hex (mm)	Weight (g)	Package (pcs)
MBM1LS07E0	PG 7	2,8	15	1,8	100
MBM1LS09E0	PG 9	2,8	18	2,2	50
MBM1LS11E0	PG 11	3	21	2,8	50
MBM1LS13E0	PG 13,5	3	23	3,4	50
MBM1LS16E0	PG 16	3	26	4,4	50
MBM1LS21E0	PG 21	3,5	32	7,4	25
MBM1LS29E0	PG 29	4	40	10,2	20
MBM1LS36E0	PG 36	5	50	17,2	10
MBM1LS42E0	PG 42	5	60	32,6	5
MBM1LS48E0	PG 48	5,5	64	35,8	5

Dimensions

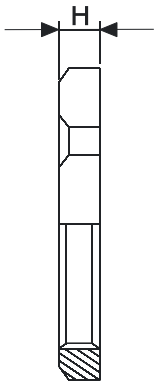

Technical specifications

Material

- Hexagonal locknut: stainless steel AISI303 / AISI316L
- Connection thread: metric (EN60423) / PG (DIN 40430)
- Temperature range: -60 °C +200 °C

Properties

- For tightening of stainless steel cable glands



		Dimensions (mm)			
Order code	Thread (AG)	H	Hex (mm)	Weight (g)	Package (pcs)
MBS2LS12E0	M 12 x 1,5	2,8	15	2	100
MBS2LS16E0	M 16 x 1,5	3	19	4	50
MBS2LS20E0	M 20 x 1,5	3,5	24	5	50
MBS2LS25E0	M 25 x 1,5	3,5	30	8,5	25
MBS2LS32E0	M 32 x 1,5	4	36	12	20
MBS2LS40E0	M 40 x 1,5	4	46	17	10
MBS2LS50E0	M 50 x 1,5	5	55	28	5
MBS2LS63E0	M 63 x 1,5	5	70	37	5

		Dimensions (mm)			
Order code	Thread (AG)	H	Hex (mm)	Weight (g)	Package (pcs)
MBS1LS07E0	PG 7	2,8	15	2	100
MBS1LS09E0	PG 9	2,8	18	3	50
MBS1LS11E0	PG 11	3	22	4	50
MBS1LS13E0	PG 13,5	3	24	5	50
MBS1LS16E0	PG 16	3	27	7	50
MBS1LS21E0	PG 21	3,5	32	8,5	25
MBS1LS29E0	PG 29	4	41	10,2	20
MBS1LS36E0	PG 36	5	50	10	17
MBS1LS42E0	PG 42	5	60	28	5
MBS1LS48E0	PG 48	5,5	65	35	5

Dimensions

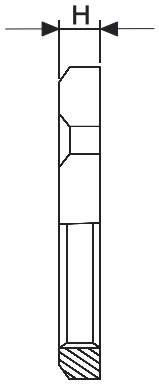

Technical specifications

Material

- Hexagonal locknut: nickel-plated brass
- Connection thread: metric (EN60423) / PG (DIN 40430)
- Temperature range: -60 °C +200 °C

Properties

- For tightening of EMC cable glands



Order code Brass	Thread (AG)	Dimensions (mm)		Hex (mm)	Weight (g)	Package (pcs)
		H	S			
MBM2LS12E1	M 12 x 1,5	3,3	0,5	15	3	100
MBM2LS16E1	M 16 x 1,5	3,5	0,5	19	4	50
MBM2LS20E1	M 20 x 1,5	3,5	0,5	24	5	50
MBM2LS25E1	M 25 x 1,5	3,5	0,5	30	8,5	25
MBM2LS32E1	M 32 x 1,5	4,0	0,5	36	11	20
MBM2LS40E1	M 40 x 1,5	4,6	0,6	45	17	10
MBM2LS50E1	M 50 x 1,5	5,6	0,6	55	28	5
MBM2LS63E1	M 63 x 1,5	6,7	0,7	70	37	5
MBM2LS75E1	M 75 x 1,5	8,0	1,0	85	109	5

Order code Brass	Thread (AG)	Dimensions (mm)		Hex (mm)	Weight (g)	Package (pcs)
		H	S			
MBS1LS07E1	PG 7	3,3	0,5	15	3	100
MBS1LS09E1	PG 9	3,3	0,5	18	4	50
MBS1LS11E1	PG 11	3,5	0,5	21	5	50
MBS1LS13E1	PG 13,5	3,5	0,5	23	8	50
MBS1LS16E1	PG 16	3,5	0,5	26	11	50
MBS1LS21E1	PG 21	4,0	0,5	32	15	25
MBS1LS29E1	PG 29	4,6	0,6	40	19	20
MBS1LS36E1	PG 36	5,6	0,6	50	28	10
MBS1LS42E1	PG 42	5,6	0,6	60	37	5
MBS1LS48E1	PG 48	6,1	0,6	65	45	5

Dimensions

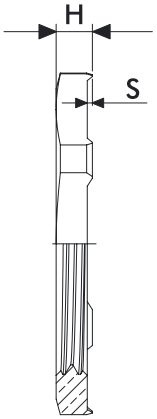

Single grommets are cable grommets with various design for leading through both low and medium power current cables as well as various types of tubing. These are suitable for in- and outdoor applications and available for both PG-and mm-openings.

Single grommets are available in many different polymers with different characteristics, such as weather, UV-and ozone resistance, oil resistance and RoHS compliance.

Models T-VET and T-GET are new design which can be used as sealing plug. Both these designs give absolute protection against dust and strong jets of water and also against effects of immersion between 15 cm and 1 m (IP67).

Single grommets T-VET and T-GET are available as standard of TPE material and are inspected and certified by SGS Fimko, the Finnish authority in charge of electrical equipment safety standards.



Installation



Make a hole of appropriate size to blind plate or knock-out plate. Avoid rough and sharp edges.



Place the grommet on the hole and pull it firmly to its place.



Make a small hole into the membrane using a screwdriver or cut the top of the cone using side cutters.



Push the cable or tube through the guide hole.



(Back side) Pull the cable or tube back for some 20 mm to lock it.



(Front side) Pull the cable or tube back for some 20 mm to lock it.

Single grommets T-VET route cables and tubing for low and medium power currents. They are suitable for indoor and outdoor use and fit PG openings. The T-VET model features a double seal design, allowing it to be used as a plug.

Technical specifications

- IP67 total protection against ingress of dust and protection against the effects of immersion between 15,0 cm and 1,0 m
- Made of TPE material
- Flame resistant UL 94 V-0 (look at product table)
- Plate wall thickness between 1 - 4 mm.
- Available for cables with 3 to 35 mm diameter
- Operating temperature from -40 °C to +100 °C



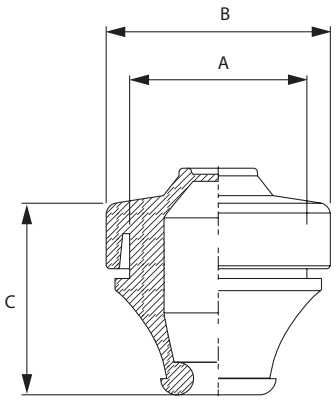

Order code	Type	Cable diameter (mm)	Color	Shade	Classification	Dimensions (mm) A	B	C	Weight (g)	Package (pcs)
MBB0105G11	PG7	3 - 5	Grey	RAL 7042		13	20	17	2,7	50
MBB0105X11	PG7		Grey	RAL 7035	UL 94 V-0				3,4	
MBB0105B11	PG7		Black		UL 94 V-0, oil resistant					
MBB0107G11	PG9	5 - 7	Grey	RAL 7042		16	20	19	3,1	50
MBB0107X11	PG9		Grey	RAL 7035	UL 94 V-0				3,5	
MBB0107B11	PG9		Black		UL 94 V-0, oil resistant					
MBB0110G11	PG11	7 - 10	Grey	RAL 7042		19	24	21	4,3	50
MBB0110X11	PG11		Grey	RAL 7035	UL 94 V-0				5	
MBB0110B11	PG11		Black		UL 94 V-0, oil resistant					
MBB0114G11	PG16	10 - 14	Grey	RAL 7042		23	29	23	6,7	50
MBB0114X11	PG16		Grey	RAL 7035	UL 94 V-0				7,8	
MBB0114B11	PG16		Black		UL 94 V-0, oil resistant					
MBB0120G11	PG21	14 - 20	Grey	RAL 7042		29	34	26	8	25
MBB0120X11	PG21		Grey	RAL 7035	UL 94 V-0				9,2	
MBB0120B11	PG21		Black		UL 94 V-0, oil resistant					
MBB0126G11	PG29	20 - 26	Grey	RAL 7042		38	46	30	15	25
MBB0126X11	PG29		Grey	RAL 7035	UL 94 V-0				17,4	
MBB0126B11	PG29		Black		UL 94 V-0, oil resistant					
MBB0135G11	PG36	26 - 35	Grey	RAL 7042		48	57,5	33	25	10
MBB0135X11	PG36		Grey	RAL 7035	UL 94 V-0				28	
MBB0135B11	PG36		Black		UL 94 V-0, oil resistant					

Single grommets T-GET route cables and tubing for low and medium power currents. They are suitable for indoor and outdoor use and fit mm openings. The T-GET model features a double seal design, allowing it to be used as a plug.

Technical specifications

- IP67 total protection against ingress of dust and protection against the effects of immersion between 15,0 cm and 1,0 m
- Made of TPE material
- Flame resistant UL 94 V-0 (look at product table)
- Plate wall thickness between 1 - 5 mm and 1,2 - 5,2 mm.
- Available for cables with 3 to 60 mm diameter
- Operating temperature from -40 °C to +100 °C



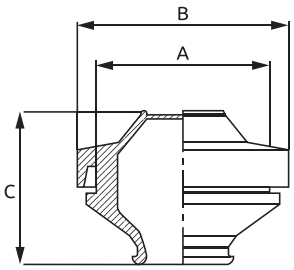

Order code	Type	Cable diameter (mm)	Color	Shade	Classification	Dimensions (mm) A	B	C	Plate thickness (mm)	Weight (g)	Package (pcs)
MBB0305G11	M12	3 - 5	Grey	RAL 7042		12	19	20,9	1 - 5	2,8	50
MBB0305X11	M12		Grey	RAL 7035	UL 94 V-0						
MBB0305B11	M12		Black		UL 94 V-0, oil resistant						
MBB0307G11	M16	5 - 7	Grey	RAL 7042		16	23	21,6	1 - 5	3,2	50
MBB0307X11	M16		Grey	RAL 7035	UL 94 V-0						
MBB0307B11	M16		Black		UL 94 V-0, oil resistant						
MBB0310G11	M20	7 - 10	Grey	RAL 7042		20	27	24,3	1 - 5	4,3	50
MBB0310X11	M20		Grey	RAL 7035	UL 94 V-0						
MBB0310B11	M20		Black		UL 94 V-0, oil resistant						
MBB0314G11	M25	10 - 14	Grey	RAL 7042		25	32	24,8	1 - 5	8	50
MBB0314X11	M25		Grey	RAL 7035	UL 94 V-0						
MBB0314B11	M25		Black		UL 94 V-0, oil resistant						
MBB0320G11	M32	14 - 20	Grey	RAL 7042		32	39	28,1	1 - 5	12	25
MBB0320X11	M32		Grey	RAL 7035	UL 94 V-0						
MBB0320B11	M32		Black		UL 94 V-0, oil resistant						
MBB0326G11	M40	20 - 26	Grey	RAL 7042		40	46	31,8	1 - 5	16,4	25
MBB0326X11	M40		Grey	RAL 7035	UL 94 V-0						
MBB0326B11	M40		Black		UL 94 V-0, oil resistant						
MBB0335G11	M50	26 - 35	Grey	RAL 7042		50	57	39,7	1 - 5	24	10
MBB0335X11	M50		Grey	RAL 7035	UL 94 V-0						
MBB0335B11	M50		Black		UL 94 V-0, oil resistant						
MBB0345G11	M60	30 - 45	Grey	RAL 7042		60	69	59,6	1 - 5	54	5
MBB0345X11	M60		Grey	RAL 7035	UL 94 V-0						
MBB0345B11	M60		Black		UL 94 V-0, oil resistant						
MBB0360G11	M80	40 - 60	Grey	RAL 7042		80	89	78,2	1,2 - 5,2	110	5
MBB0360X11	M80		Grey	RAL 7035	UL 94 V-0						
MBB0360B11	M80		Black		UL 94 V-0, oil resistant						

Snap-In Cable Entry Grommets – IP54 Protection. The Morek Conical Grommets Series delivers reliable cable sealing in a compact and easy-to-install design. Manufactured from UL94 V-0 flame-retardant TPE material, these grommets ensure safety, compliance, and durability across industrial applications. Their unique conical structure adapts to various cable sizes, offering excellent strain relief and sealing performance while enabling fast, tool-free installation.

Key Benefits

- IP54 protection – Seals against dust and splashing water
- UL94 V-0 flame-retardant material – Enhanced safety compliance
- Wide cable range – Supports cables up to Ø45 mm
- Snap-in mounting – Fast, tool-free installation
- Flexible conical design – Smooth cable movement and strain relief
- Clean professional finish – Ideal for modern enclosures

Technical specifications

- Material: TPE
- Color: Black / Gray
- Flammability Rating: UL94 V-0
- Protection Class: IP54
- Compliance: RoHS

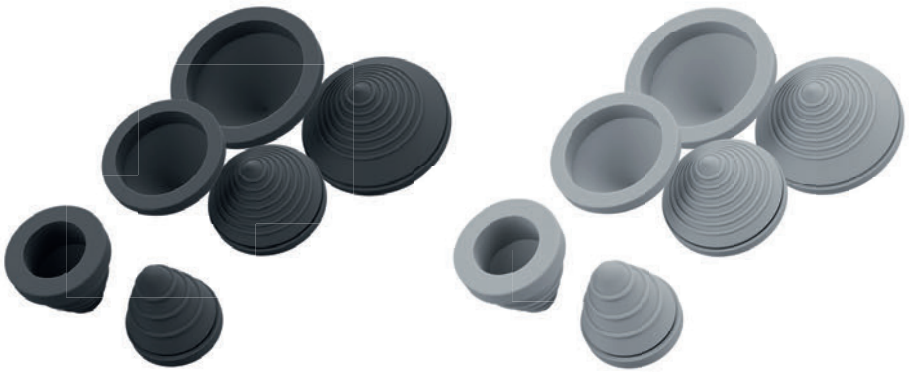

Order code		Type	Cable diameter max (mm)	Diameter	Hight	Cut-out Ø	Plate thickness (mm)	Weight (g)	Package (pcs)
MBB0817B11	MBB0817G11	C22	17	28	30,5	21,5	1,5 - 3	5,14	100
MBB0822B11	MBB0822G11	C26	22	32,4	30	26	1,5 - 3	6,24	100
MBB0827B11	MBB0827G11	C33	27	39,9	30	33,5	1,5 - 3,5	7,68	100
MBB0838B11	MBB0838G11	C43	38	49,4	30	43	1,5 - 3,5	10,8	100
MBB0845B11	MBB0845G11	C49	45	57,8	30	49,5	1,5 - 3,5	13,79	100

Dimensions

C22

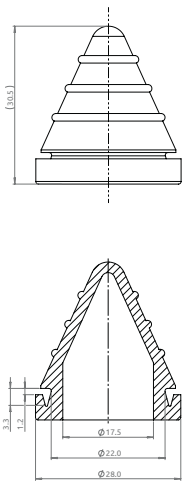

C26

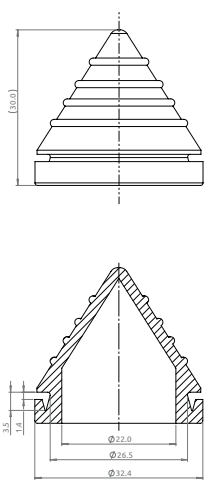

C33

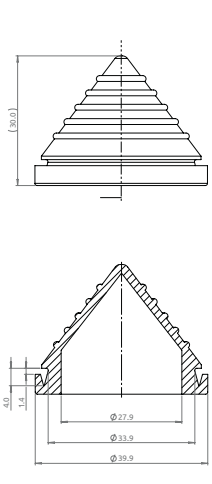

C43

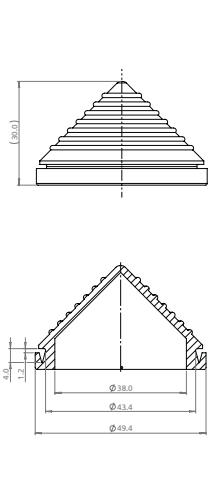

C49

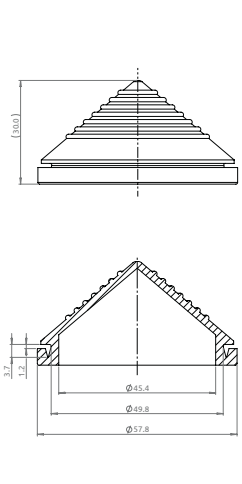

Single grommets T-GD and T-GDM route cables and tubing for low and medium power currents. They are suitable for indoor and outdoor use. T-GD grommets fit PG openings, while T-GDM grommets fit metric openings (mm).

Technical specifications

- IP54 protection against dust and water splashed from all directions.
- Made of TPE material
- Flame resistant UL 94 V-0
- Plate wall thickness between 1 - 2 mm and 1,5 - 3 mm.
- Available for cables with 9 to 69 mm diameter
- Operating temperature from -40 °C to +100 °C



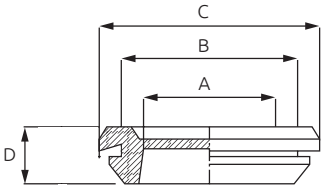

T-GD

Order code	Type	Cable diameter max (mm)	Color	Dimensions (mm)				Plate thickness (mm)	Weight (g)	Package (pcs)
				A	B	C	D			
MBB0509B11	PG9	9	Black	9	15,5	20	7	1 - 2	2	100
MBB0511B11	PG11	11	Black	11	18,5	23	7	1 - 2	3	100
MBB0513B11	PG13,5	13,5	Black	13,5	20,5	25	7	1 - 2	4	100
MBB0516B11	PG16	16	Black	16	22,5	28	7	1 - 2	4	100
MBB0521B11	PG21	21	Black	21	28	35	9	1 - 2	12	100
MBB0529B11	PG29	29	Black	29	37	44	10	1 - 2	16	100
MBB0536B11	PG36	36	Black	36	47	54	12	1,5 - 3	17	100
MBB0548B11	PG48	48	Black	48	60	68	12	1,5 - 3	54	50
MBB0553B11	PG53	53	Black	53	64	75	12	1,5 - 3	110	50
MBB0569B11	PG69	69	Black	69	79	90	12	1,5 - 3	110	30

T-GDM

Order code	Type	Cable diameter max (mm)	Color	Dimensions (mm)				Plate thickness (mm)	Weight (g)	Package (pcs)
				A	B	C	D			
MBB0609B11	M12	9	Black	9	12,2	17	7	1 - 2	2	100
MBB0611B11	M16	11	Black	11	16,2	21	7	1 - 2	3	100
MBB0613B11	M20	13,5	Black	13,5	20,5	25	7	1 - 2	4	100
MBB0616B11	M25	16	Black	16	25,2	31	7	1 - 2	4	100
MBB0621B11	M32	21	Black	21	32,2	40	9	1 - 2	12	100
MBB0629B11	M40	29	Black	29	40,2	48	10	1 - 2	16	100
MBB0636B11	M50	36	Black	36	50,2	58	12	1,5 - 3	17	100
MBB0648B11	M60	48	Black	48	60,2	68	12	1,5 - 3	54	50
MBB0653B11	M70	53	Black	53	70,2	81	12	1,5 - 3	110	50
MBB0669B11	M80	69	Black	69	80,2	91	12	1,5 - 3	110	30

T-CG single grommets with integrated stainless steel cable tie and fasteners provide a robust, space-efficient solution for routing and sealing individual large-diameter cables through enclosures and panels. Designed for demanding industrial environments, these grommets combine high ingress protection with secure strain relief in one compact assembly.



Key Benefits

- IP66 protection against dust and powerful water jets
- Integrated stainless steel cable tie and fasteners for secure strain relief
- Halogen-free TPE membrane for safety and durability
- Wide cable diameter coverage for large single cables
- Quick installation with minimal tools
- Suitable for industrial cabinets, machinery, and outdoor enclosures

Technical specifications

- Made of TPE material
- Flame resistant options available both UL 94 HB and UL94 V-0
- Service temperature for unstressed material -40 °C to +100 °C

Order code	Type	Cable diameter	Color	Dimensions (mm)	Classification	Weight (g)	Package (pcs)
MBA6N62G11	T-CG 62	36 - 62	Light gray	107x97x59	UL94 HB	250	20
MBA6N62H11*					-		100
MBA6N62X11*					UL94 V-0		100
MBA6N88G11	T-CG 88	50 - 88	Light gray	127x122x75	UL94 HB	300	20
MBA6N88H11*					-		100
MBA6N88X11*					UL94 V-0		100

*Without fasteners, bulk package

Dimensions

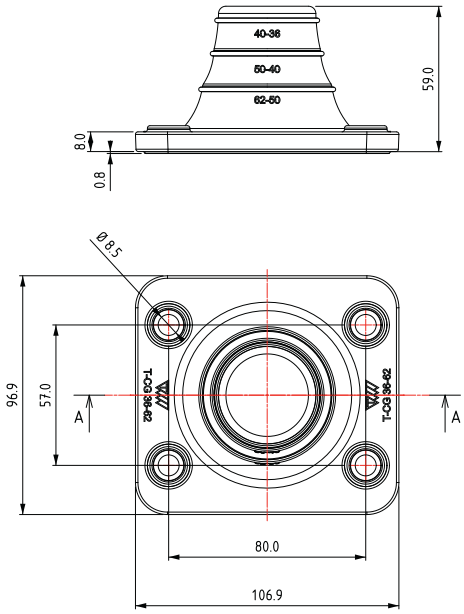

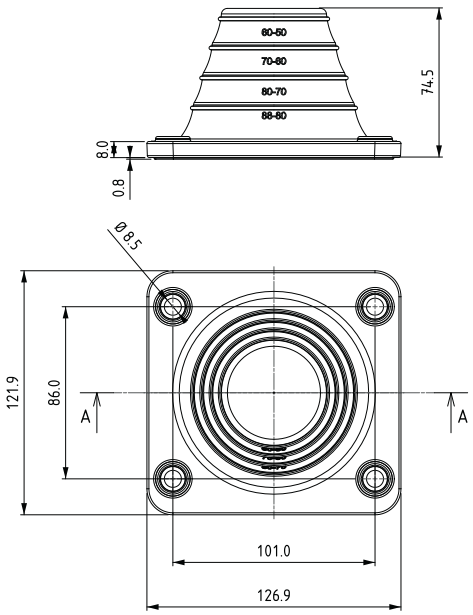

Single grommets M 20-80 route low and medium power cables and tubing, specifically designed for cables with larger diameters up to 80 mm. They are suitable for both indoor and outdoor applications.

Technical specifications

- Made of TPE material
- Flame resistant UL 94 V-0
- Plate wall thickness 1,5 - 3 mm.
- Available for cables with 20 to 80 mm diameter
- Service temperature for unstressed material -40 °C to +100 °C

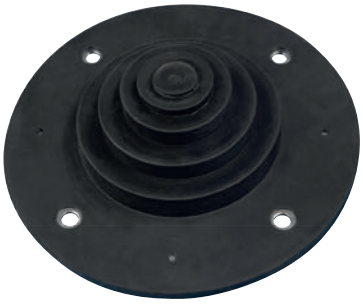

Order code	Color	Classification	Weight (g)	Package (pcs)
MBA6N80G11	Grey (RAL 7042)	-	260	50
MBA6N80X11	Light Grey (RAL 7035)	UL 94 V-0	260	50
MBA6N80B11	Black	UL 94 V-0, Oil resistant	260	50

Dimensions

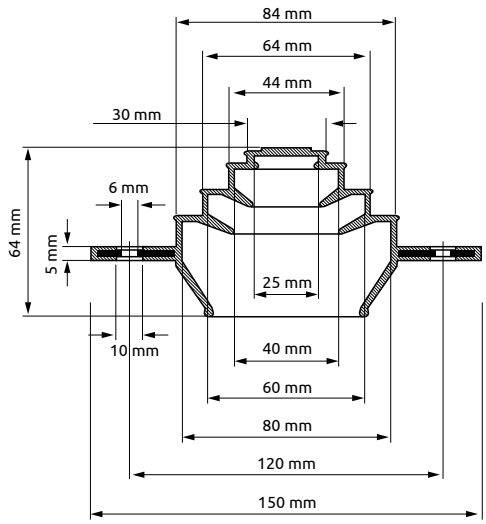

M-GD Series
Round Cable Entry Plates

Fast and easy
assembly

UL94 V-0, halogen-free
thermoplastic elastomer and fiberglass reinforced plastic

-40°C...+90°C
material service temperature (unstressed)



The cable entries of the new M-GD serie match the cut-out dimensions from M20 to M50 with a various combinations of cable solutions.
These high cable density entries enable fast routing of cables into control cabinets, panels or machines and thanks to the flexible outer lip design, can be installed into cabinet walls with thickness variable from 1 to 4 mm.

Technical specifications

- Thermoplastic elastomer and fiberglass reinforced plastic
- UL94 V-0, halogen-free
- Light grey
- Unstressed service temperature: -40°C...+90°C

Advantages

- Fast and easy assembly
- High cable density
- High IP protection (P65)
- Hygienic design with a flat surface structure
- Designed for cabinet walls of 1 to 4mm thickness in one
- Suitable for both indoor and outdoor use

Cross-table of connectivity MGD plates

Cable diameter	MGD 20-4	MGD 20-4.1	MGD 20-5	MGD 20-9	MGD 25-4	MGD 25-6	MGD 25-7	MGD 32-7	MGD 32-10	MGD 32-10.2	MGD 32-11	MGD 32-13	MGD 40-9	MGD 40-16	MGD 40-17	MGD 50-9	MGD 50-11	MGD 50-12	MGD 50-16	MGD 50-18	MGD 50-20	MGD 50-35
1-3,6 mm			2	4																		
1-4 mm															1					2		
1-4,5 mm		2																				
1-4,6 mm			2	5																		
1-5,2 mm	4					4	7		6		9	13										35
1-5,3 mm														2					4			
1-6 mm																				2		
1-6,3 mm														10					5		16	
1-6,4 mm									2	10												
1-7 mm																5						
1-7,2 mm															16		7			4		
1-8 mm		2			4			7			2											
1-9,2 mm																		10				
1-9,3 mm																					4	
1-9,4 mm						2			2											5		
1-9,5 mm													8	2					3			
1-10,6 mm			1																			
1-11,2 mm																	3	2				
1-11,3 mm													1	2					4			
1-12 mm																				5		
1-18 mm																4						
1-22,5 mm																	1					

Plate thickness 1-4 mm

Order code	Type	Cable diameter (mm)	Total number of cables	Cut-out	Cut-out Ø (mm)	Dimensions (mm)	Weight (g)	Package (pcs)
MBB0721L11	MGD 20-4	4 x 1 -5,2	4	M20	Ø 20,5	32,2 x 13	6	500
MBB0722L11	MGD 20-4.1	2 x 1-8	4					
MBB0725L11	MGD 20-5	1 x 1 - 10,6 2 x 1 - 4,6 2 x 1 - 3,6	5					
MBB0729L11	MGD 20-9	5 x 1 - 4,6 4 x 1 -3,6	9					
MBB0724L11	MGD 25-4	4 x 1 - 8	4	M25	Ø 25,5	37,2 x 13	8	
MBB0726L11	MGD 25-6	4 x 1 - 5,2 2 x 1 - 9,4	6					
MBB0727L11	MGD 25-7	7 x 1 - 5,5	7					
MBB0737L11	MGD 32-7	7 x 1 - 8	7	M32	Ø 32,5	44,2 x 13	12	400
MBB0730L11	MGD 32-10	6 x 1 - 5,2 2 x 1 - 6,4 2 x 1 - 9,4	10					
MBB0732L11	MGD 32-10.2	10 x 1 - 6,4	10					
MBB0731L11	MGD 32-11	2 x 1 - 8 9 x 1 - 5,2	11					
MBB0733L11	MGD 32-13	13 x 1 - 5,2	13					
MBB0749L11	MGD 40-9	8 x 1 - 9,5 1 x 1 - 11,3	9	M40	Ø 40,5	52,2 x 13	14	300
MBB0746L11	MGD 40-16	2 x 1 - 5,3 10 x 1 - 6,3 2 x 1 - 9,5 2 x 1 - 11,3	16					250
MBB0747L11	MGD 40-17	1 x 1 - 4	17					300
MBB0759L11	MGD 50-9	5 x 1 - 7 4 x 1 - 18	9	M50	Ø 50,5	62,2 x 13	23	300
MBB0751L11	MGD 50-11	7 x 1 - 7,2 3 x 1 - 11,2 1 x 1 - 22,5	11					
MBB0752L11	MGD 50-12	10 x 1 - 9,2 2 x 1 - 11,2	12					
MBB0756L11	MGD 50-16	4 x 1 - 5,3 5 x 1 - 6,3 3 x 1 - 9,5 4 x 1 - 11,3	16					
MBB0758L11	MGD 50-18	2 x 1 - 4,6 2 x 1 - 6,4 4 x 1 - 7,2 5 x 1 - 9,4 5 x 1 - 12	18					
MBB0750L11	MGD 50-20	16 x 1 - 6,5 4 x 1 - 9,5	20					
MBB0755L11	MGD 50-35	35 x 1 - 5,2	35					

Cable entry plates

Fast and easy
assembly

Dual sealing
according to IP65/66

UL94 V0 self-extinguishing
options available

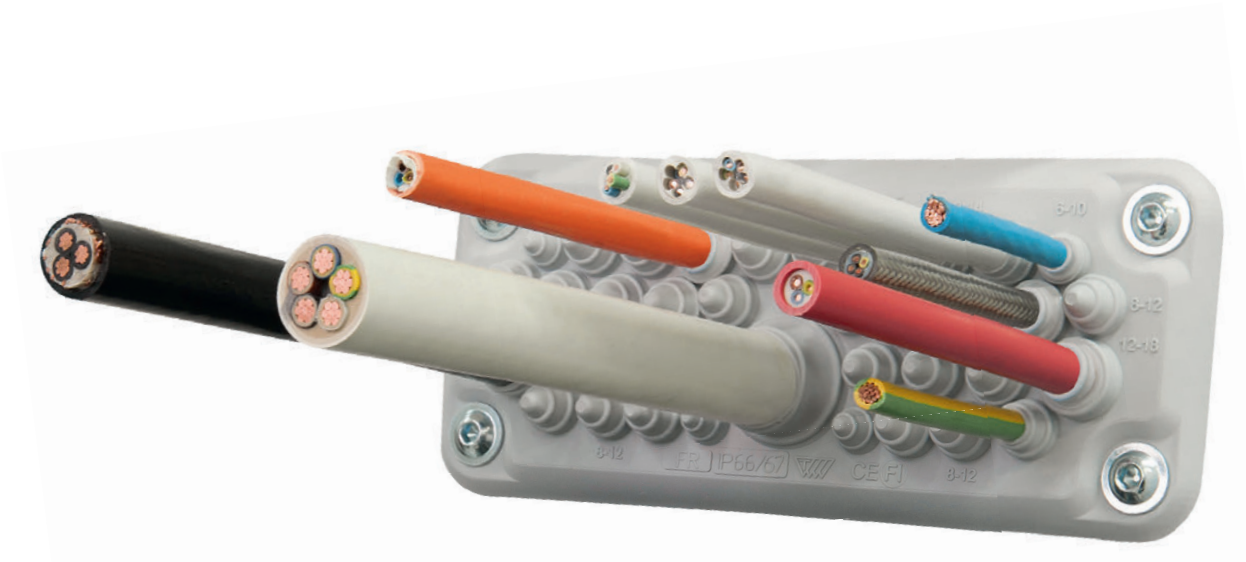

MC (IP66/67) cable entry plates are designed to route and seal cables without connectors. They offer quick and easy assembly by creating a small hole in the thin membrane and pushing the cables through. These plates are suitable for standard cut-outs for FL21 and can be securely screwed in place.

Advantages

- Fast and easy assembly
- High cable density
- Dual cable sealing with IP66/IP67
- Excellent IP protection when cables are bent
- Screw mounting
- Suitable for both indoor and outdoor use

Technical specifications

- IP rating: IP66 and IP67
- Material: Thermoplastic elastomer
- Material base frame: Metal reinforcement electroplated steel
- Color: Black or Grey (RAL7035)
- Flame class: UL94-V0, self-extinguishing option available
- Temperature: -40 °C...+100 °C
- Properties: Halogen free, Silicone free
- Mounting type: Screw type mounting
- Diam. of screw holes: 9,5 mm







Description	Package (pcs)	MC 3/7 (IP66/67)	MC 25/27 (IP66/67)	MC 35/37 (IP66/67)
Light Grey RAL 7035 4 plastic pins included	40	MBA1C07G11	MBA1C27G11	MBA1C37G11
Light Grey RAL 7035 UL 94 V-0 approved	60	MBA1N07X11	MBA1N27X11	MBA1N37X11
Black UL 94 V-0 approved	60	MBA1N07B11	MBA1N27B11	MBA1N37B11
Technical data				
Service temperature		-40 to + 100 °C	-40 to + 100 °C	-40 to + 100 °C
Dimensions height C (mm)		76	43	43
Number of cables (pcs) x cable diameter (mm)		4 x 10 - 14 2 x 24 - 54 1 x 30 - 60 - -	4 x 5 - 7 4 x 8 - 12 13 x 10 - 14 4 x 14 - 20 2 x 20 - 26	4 x 6 - 10 14 x 8 - 12 16 x 10 - 14 2 x 12 - 18 1 x 17 - 32
Total number of cables		7	27	37
Mounting hole size		C - FL 21	C - FL 21	C - FL 21
Weight (g)		206	229	233

Mounting pins are available on request.

Dimensions of cable entry plates and mounting hole

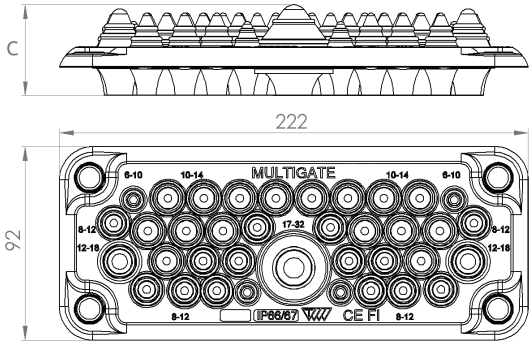

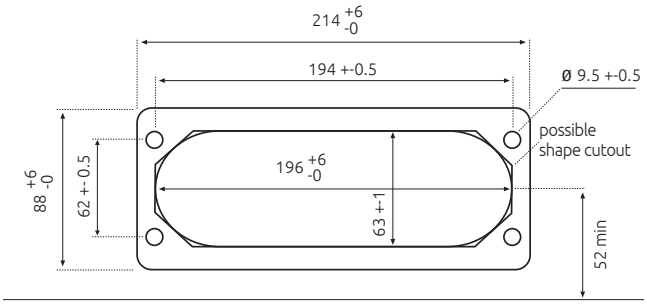

FL 21

MC (IP65) cable entry plates are designed to route and seal cables without connectors. Assembly is quick and easy by creating a small hole in the thin membrane and pushing the cables through. They are suitable for standard FL21 cut-outs and can be securely screwed in place.

Advantages

- Fast and easy assembly
- High cable density
- Dual cable sealing with IP65
- Hygienic design - free of dirt-collecting recesses
- Screw mounting
- Suitable for both indoor and outdoor use

Technical specifications

- IP rating: IP65
- Material: Thermoplastic elastomer
- Material base frame: Metal reinforcement electroplated steel
- Color: Black or Grey (RAL7035)
- Flame class: UL94-V0, self-extinguishing option available
- Oil-resistant option available
- Temperature: -40 °C...+100 °C
- Properties: Halogen free, Silicone free
- Mounting type: Screw type mounting
- Diam. of screw holes: 9,5 mm



MC 3 (IP65)



MC 25 (IP65)



MC 35 (IP65)

	MC 3 (IP65)	MC 25 (IP65)	MC 35 (IP65)
Light Grey RAL 7035 4 plastic pins included	MBA1C03L11	MBA1C25L11	MBA1C35L11
Black	MBA1N03A11	MBA1N25A11	MBA1N35A11
Black, UL94 V0, oil-resistant	MBA1N03B11	MBA1N25B11	MBA1N35B11
Technical data			
Service temperature	-40 to + 100° C	-40 to + 100° C	-40 to + 100° C
Dimensions (mm)	214 x 82	216 x 84	216 x 84
Number of cables (pcs) x cable diameter (mm)	4 x 8 - 12 (IP54) 2 x 24 - 54 (IP65) 1 x 30 - 60 (IP65) - -	4 x 5 - 7 4 x 8 - 12 12 x 10 - 14 4 x 14 - 20 1 x 20 - 26	2 x 6 - 10 14 x 7 - 12 16 x 10 - 14 2 x 12 - 18 1 x 17 - 32
Total number of cables	7	25	35
Mounting hole size	C - FL 21	C - FL 21	C - FL 21
Weight (g)	199	230	220
Package (pcs)	100	100	100

Mounting pins are available on request.

Dimensions of cable entry plates and mounting hole

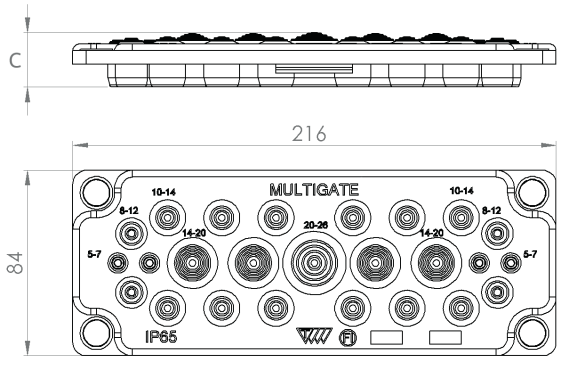

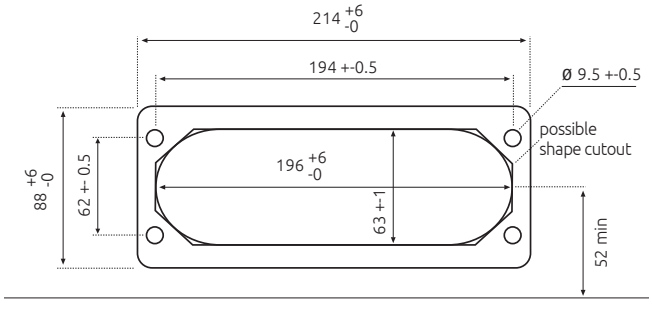

FL 21

MC 4 (IP65)

- MC 4 (IP65) cable entry plates are designed for route and seal cables without connectors
- The assembly of the MC 4 (IP65) with cables or pneumatic hoses can be done quick and easy. Simply make a small hole in the thin membrane and push the cables through

Advantages

- Fast and easy assembly
- High cable density
- Dual cable sealing with IP65
- Hygienic design - free of dirt-collecting recesses
- Screw mounting
- Suitable for both indoor and outdoor use

Technical specifications

- IP rating: IP65
- Material: Thermoplastic elastomer
- Material base frame: Metal reinforcement stainless steel
- Color: Black
- Flame class: UL94-V0, self-extinguishing option available
- Oil-resistant option available
- Temperature: -40 °C...+100 °C
- Properties: Halogen free, Silicone free
- Mounting type: Screw type mounting
- Diam. of screw holes: 9,5 mm



Stainless steel reinforcement frame eliminates the inductive eddy currents that can be generated by the cables



MC 4 (IP65)

Black, UL 94 V-0 approved ●	MBA1F04B11

Technical data	
Service temperature	-40 to + 100° C
Number of cables (pcs) x cable diameter (mm)	4 x 30 - 63 mm
Total number of cables	4
Mounting hole size	283 x 68 mm
Weight (g)	258
Package (pcs)	50

Dimensions of cable entry plates and mounting hole

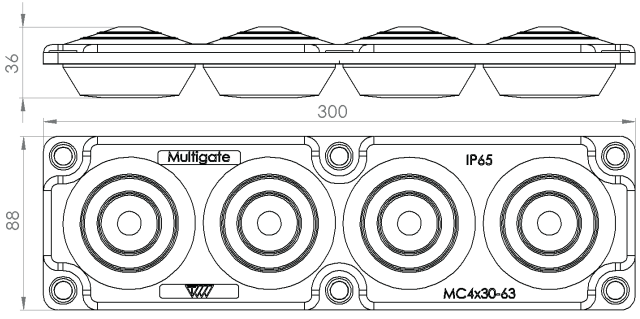

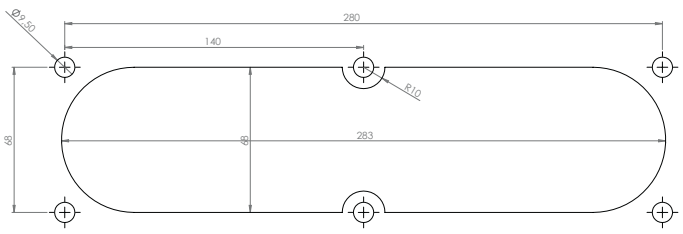

MC 10 (IP55), MC 16 (IP54) and MC 24 (IP66) cable entry plates are designed to route and seal cables without connectors.

Installation of MC 10 (IP55), MC 16 (IP54) and MC 24 (IP66) with cables or pneumatic hoses is quick and easy. Simply make a small hole in the thin membrane and push the cables through.

Suitable for standard FL21 cut-outs. Designed for screw mounting.

Advantages

- Fast and easy assembly
- High cable density
- Excellent IP protection when cables are bent
- Screw mounting
- Suitable for both indoor and outdoor use

Technical specifications

- IP rating: IP55 / IP54 / IP66
- Material: Thermoplastic elastomer (TPE)
- Material base frame: glass fibre reinforced polypropylene (PP-GF)
- Color: Grey (RAL7035)
- Temperature: -40 °C...+100 °C
- Properties: Halogen free, Silicone free
- Mounting type: Screw type mounting
- Diam. of screw holes: 9,5 mm / MC 24 5,5 mm



	MC 10 (IP55)	MC 16 (IP54)	MC 24 (IP66)
Light Grey, RAL 7035 UL 94 V-0 approved	MBA1N10X11	MBA1C16L11	MBA1N24X11
Technical data			
Service temperature	-40 to + 100 °C	-40 to + 100 °C	-40 to + 100 °C
Number of cables (pcs) x cable diameter (mm)	2 x 7 - 12 8 x 10 - 30	15 x 10 - 20 1 x 10 - 30	1x 4-7.5mm 18x10-17mm 3x 15-20mm 2x 21-26mm
Total number of cables	10	16	24
Mounting hole size	C - FL 21	C - FL 21	MC 24
Weight (g)	200	120	215
Package (pcs)	100	80	100

Mounting pins are available on request.

Dimensions of cable entry plates and mounting hole

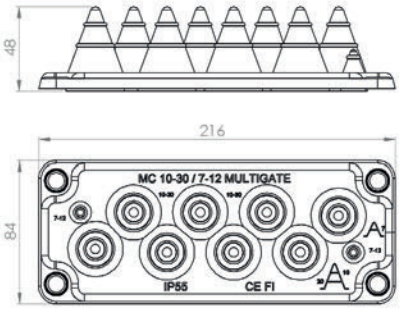

MC 10

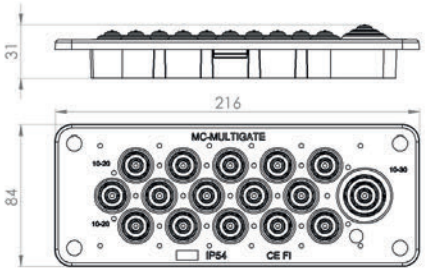

MC 16

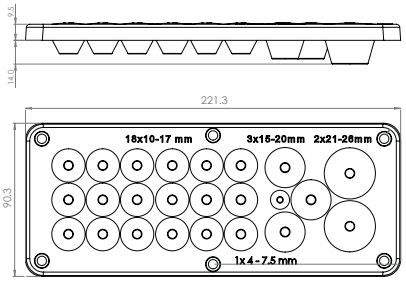

MC 24

FL 21

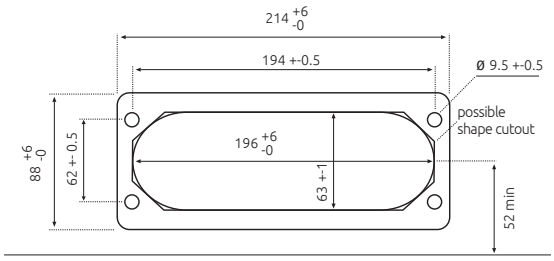

MC 24

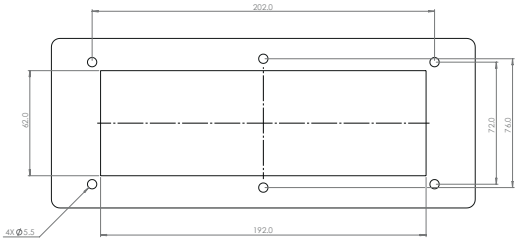

Suitable for Rittal KX/KL enclosures

LMC (IP44, 54) cable entry plates are designed for route and seal cables without connectors
The assembly of the LMC (IP44, 54) with cables or pneumatic hoses can be done quick and easy. Simply make a small hole in the thin membrane and push the cables through
Suitable for standard cut-outs for FL21. For screwing in place

Advantages

- Fast and easy assembly
- High cable density
- Excellent IP protection when cables are bent
- Screw mounting
- Suitable for both indoor and outdoor use

Technical specifications

- IP rating: IP44, IP54
- Material: Thermoplastic elastomer
- Material base frame: Metal reinforcement electroplated steel
- Color: Grey (RAL7035)
- Flame class: UL94-V0, self-extinguishing option available
- Temperature: -40 °C...+90 °C
- Properties: Halogen free, Silicone free
- Mounting type: Screw type mounting
- Diam. of screw holes: 9,5 mm

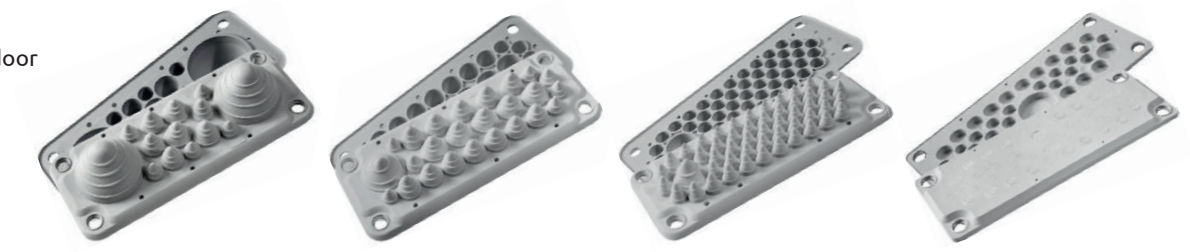

	LMC 14 (IP54)	LMC 25 (IP54)	LMC 51 (IP55)	LMC 35 (IP44)
Light Grey RAL 7035 Bulk packaging with pins	MBA3F14L11	MBA3F25L11	MBA3F51L11	MBA3F35L11
Light Grey RAL 7035 UL 94 V-0 approved	MBA3N14X11	MBA3N25X11	MBA3N51X11	–

Technical data				
Service temperature	-40 to + 100 °C	-40 to + 100 °C	-40 to + 100 °C	-40 to + 100 °C
Number of cables (pcs) x cable diameter (mm)	5 x 10 - 14 4 x 14 - 18 3 x 14 - 22 2 x 24 - 54 -	2 x 3.5 - 11 5 x 10 - 14 12 x 14 - 18 5 x 14 - 22 1 x 14 - 35	50 x 7 - 13 1 x 15 - 25 - - -	1 x 15 - 32 2 x 12 - 18 16 x 10 - 14 14 x 7 - 12 2 x 6 - 10
Total number of cables	14	25	51	35
Mounting hole size	C - FL 21	C - FL 21	C - FL 21	C - FL 21
Weight (g)	199	201	205	220
Package (pcs)	100	100	100	100
Length (A) / Width (B) / Height (C) (mm)	222 / 92 / 30	222 / 92 / 30	222 / 92 / 30	214 / 84 / 9,5

Pin (4 pcs)
Product code
MBA7300G11



Dimensions of cable entry plates and mounting hole

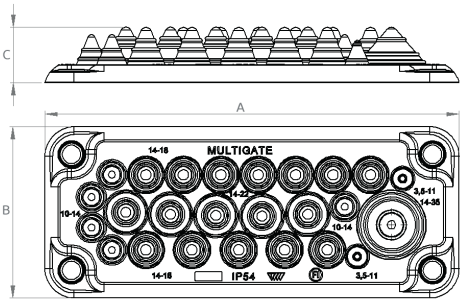

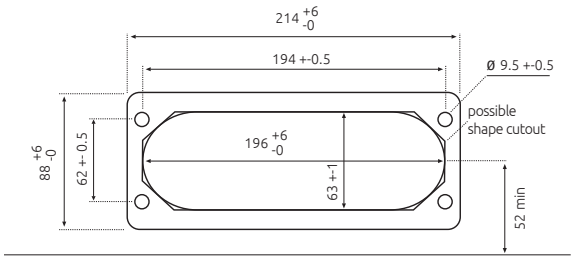

- MB (IP55, 66/67) cable entry plates are designed for route and seal cables without connectors
- The assembly of the MB (IP55, 66/67) with cables or pneumatic hoses can be done quick and easy. Simply make a small hole in the thin membrane and push the cables through
- Suitable for standard cut-outs for FL13. For screwing in place

Advantages

- Fast and easy assembly
- High cable density
- Dual cable sealing with IP66/IP67
- Excellent IP protection when cables are bent
- Screw mounting
- Suitable for both indoor and outdoor use

Technical specifications

- IP rating: IP55, IP66 and IP67
- Material: Thermoplastic elastomer
- Material base frame: Metal reinforcement electroplated steel
- Color: White or Grey (RAL7035)
- Flame class: UL94-V0, self-extinguishing option available
- Temperature: -40°C...+100 °C
- Properties: Halogen free, Silicone free
- Mounting type: Screw type mounting
- Diam. of screw holes: 7 mm





	MB 4/10 (IP55)*	MB 5/11 (IP66/67)*
Light Grey RAL 7035	-	MBA2N11L11
Light Grey RAL 7035 UL 94 V-0 approved	MBA2N10W11	MBA2N11X11
White UL 94 V-0 approved	MBA2N12W11	-

Technical data		
Service temperature	-40 to + 100 °C	-40 to + 100 °C
Number of cables (pcs) x cable diameter (mm)	4 x 10 - 25 6 x 4 - 9 - -	4 x 5 - 7 3 x 7 - 10 2 x 10 - 14 2 x 15 - 30
Total number of cables	10	11
Mounting hole size	B - FL 13	B - FL 13
Weight (g)	68	86
Package (pcs)	200	200

** For the smaller mounting hole (size B).*

Dimensions of cable entry plates and mounting hole

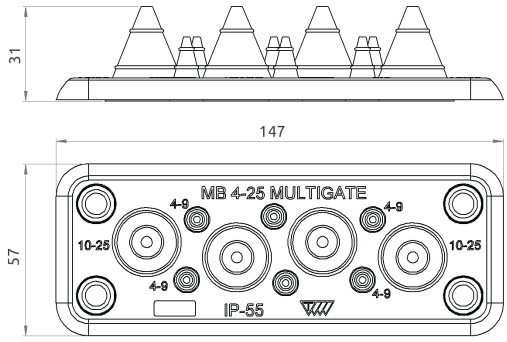

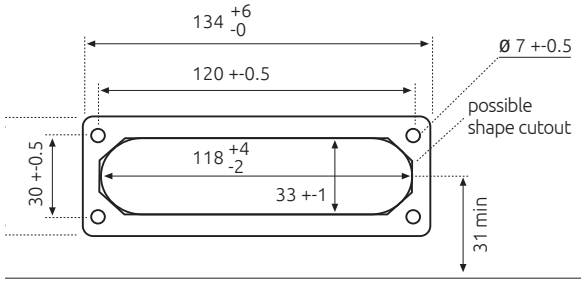

FL 13

Type	Length (A)	Width (B)	Height (C)
MB (IP55, 66/67)			
MB 4/10 (IP55)	146	56	31
MB 5/11 (IP66/67)	147	57	42

MHF series plastic reinforced cable entry plates are suitable for leading through cables and various types of tubing. They match the cut-out dimensions of standard 10/16/24-pole industrial connectors, no separate gaskets are needed.
These cable entry plates give total protection against ingress of dust and water splashed from all directions, due to IP protection class of IP66 and are suitable for both indoor and outdoor use. The materials are self-extinguishing (UL94 V0) and halogen free, the outer sides of the cable entry plates are flat, and thus suitable for medical and food industries, due to ease of cleaning.

Technical specifications

- IP rating: IP66
- Membrane material: Thermoplastic elastomer
- Frame material: Glass fiber reinforced polypropylene
- Color: Grey (RAL7035) or black (RAL9005)
- Flame-retardancy class: UL94 V0
- Temperature: -40 °C...+90 °C
- Properties: Halogen free, Silicone free
- Mounting type: Screw type mounting
- Diam. of screw holes: 4,2 mm

Advantages

- High cable density
- Self-extinguishing plastic
- Dual cable sealing with IP66
- Hygienic design - free of dirt-collecting recesses
- Screw mounting
- Suitable for both indoor and outdoor use

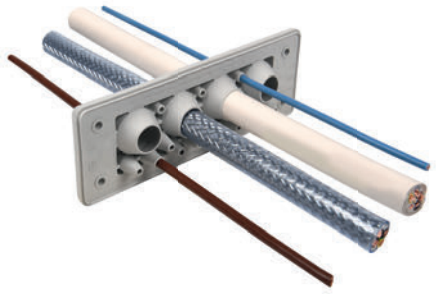

Drawing	Name	Product code	No. of cables x diameter	Weight (g)	Opening size
 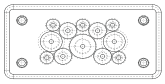	MH10 F12-1	○ MBA8N12X10 ● MBA8N12B10	5 x 3 - 7 4 x 5 - 10 2 x 7 - 13 1 x 9 - 16	48	B10
 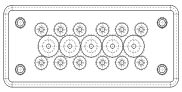	MH16 F17-1	○ MBA8N17X16 ● MBA8N17B16	12 x 3 - 7 5 x 7 - 13	59	B16
 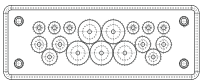	MH24 F17-2	○ MBA8N17X24 ● MBA8N17B24	6 x 3 - 7 6 x 5 - 10 5 x 9 - 16	64	B24
 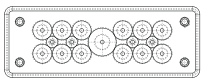	MH24 F17-3	○ MBA8N17X10 ● MBA8N17B10	4 x 3 - 7 12 x 7 - 20 1 x 10 - 20	59	B24
 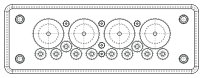	MH24 F19-1	○ MBA8N19X24 ● MBA8N19B24	5 x 1,5 - 3 10 x 3,2 - 6,5 4 x 16 - 22	71	B24
 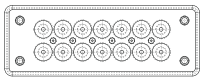	MH24 F20-1	○ MBA8N20X24 ● MBA8N20B24	6 x 1,5 - 3 14 x 7,2 - 12	71	B24
 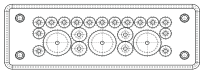	MH24 F22-1	○ MBA8N22X24 ● MBA8N22B24	15 x 3 - 7 4 x 4,5 - 10 3 x 15 - 20	65	B24
 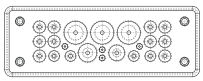	MH24 F23-1	○ MBA8N23X24 ● MBA8N23B24	4 x 1,5 - 3 4 x 3,2 - 6,3 10 x 4 - 7,5 1 x 5,5 - 10,5 1 x 8 - 12,5 3 x 12 - 16,2	71	B24
 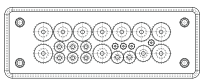	MH24 F23-2	○ MBA8N24X24 ● MBA8N24B24	4 x 1,5 - 3 6 x 3,2 - 6,3 2 x 4 - 7,5 1 x 5,5 - 10,5 10 x 8 - 12,5	71	B24
 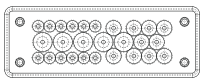	MH24 F27-1	○ MBA8N27X24 ● MBA8N27B24	12 x 3 - 7 10 x 4,5 - 10 5 x 7 - 13	70	B24
 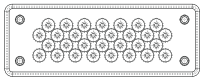	MH24 F30-1	○ MBA8N30X10 ● MBA8N30B10	30 x 3 - 8	71	B24

	Drawing	Name	Product code	No. of cables x diameter	Weight (g)	Opening size
	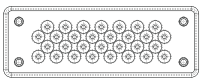	MH24 F30-2	MBA8N30X24 MBA8N30B24	8 x 1,5 - 3 8 x 3,2 - 5,5 6 x 4 - 7,5 6 x 5 - 8,5 2 x 9,5 - 14,5	71	B24
	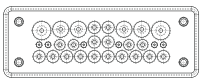	MH24 F30-3	MBA8N32X24 MBA8N32B24	6 x 1,5 - 3 4 x 3,2 - 6,3 14 x 4 - 7,5 2 x 8 - 12,5	71	B24
	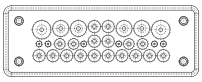	MH24 F31-1	MBA8N31X24 MBA8N31B24	20 x 3,2 - 6,5 8 x 5 - 10,2 3 x 7,5 - 12	71	B24
	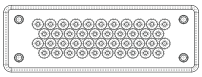	MH24 F42-1	MBA8N42X24 MBA8N42B24	42 x 3,2 - 6,5	71	B24
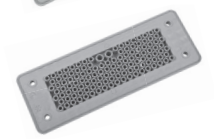	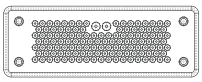	MH24 F125-1	MBA8N125X24 MBA8N125B24	123 x 1,5 - 3 2 x 2,5 - 5	71	B24

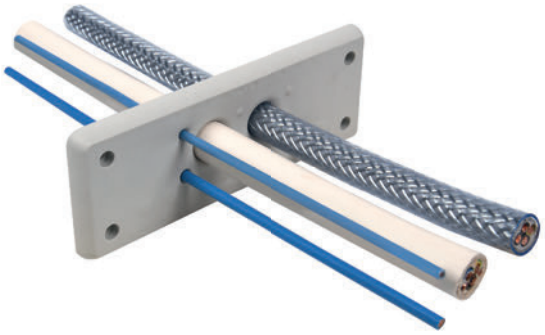

Dimensions

MH10

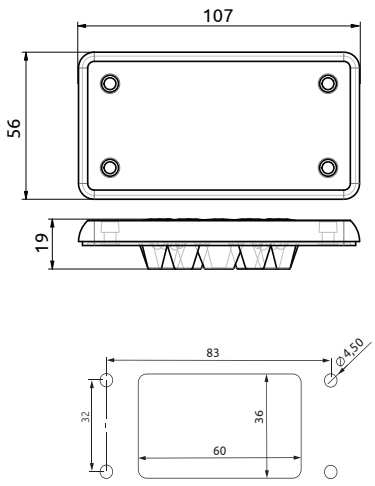

MH16

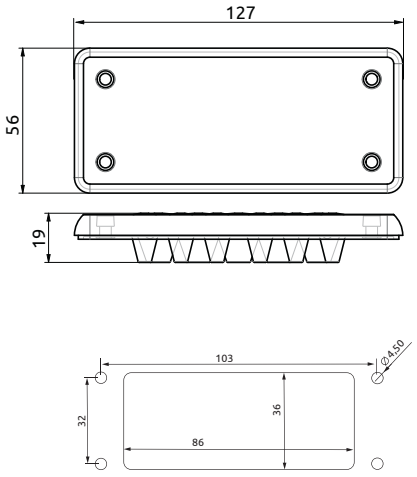

MH24

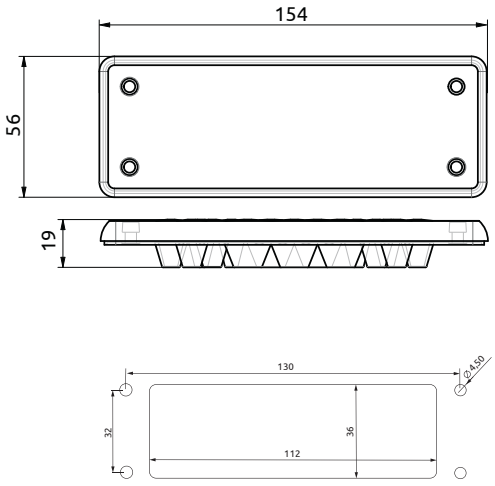

Cable/tube diameter	MH-10 F12-1	MH-16 F17-1	MH-24 F17-2	MH-24 F17-3	MH-24 F22-1	MH-24 F27-1	MH-24 F30-1	MH-24 F19-1	MH-24 F20-1	MH-24 F23-1	MH-24 F23-2	MH-24 F30-2	MH-24 F30-3	MH-24 F31-1	MH-24 F42-1	MH24 F125-1
1.5-3mm								5	6	4	4	8	6			123
2.5-5mm																2
3-7mm	5	12	6	4	15	12										
3-8mm							30									
3.2-5.5mm												8				
3.2-6.3mm										4	6		4			
3.2-6.5mm								10						20	42	
4-7.5mm										10	2	6	14			
4.5-10mm					4	10										
5-8.5mm												6				
5-10mm	4		6													
5-10.2mm														8		
5.5-10.5mm										1	1					
7-13mm	2	5				5										
7-20mm				12												
7.2-12mm									14							
7.5-12mm														3		
8-12.5mm										1	10		2			
9-16mm	1		5													
9.5-14.5mm												2				
10-20mm				1												
12-16.2mm										3						
15-20mm					3											
16-22mm								4								







Cable entry plates MC Solar are designed for efficient and secure cable routing in special cut-out applications. With an IP66 rating, these plates provide excellent protection against dust and water.

Advantages

- Fast and easy assembly
- High cable density
- Dual cable sealing with IP66/IP67
- Excellent IP protection when cables are bent
- Screw mounting
- Suitable for both indoor and outdoor use

Technical specifications

- IP rating: IP66
- Material: Thermoplastic elastomer TPE
- Color: Grey (RAL7035)
- Flame class: UL94-V0, self-extinguishing
- Temperature: -40 °C to +90 °C
- Properties: Halogen free, Silicone free



MC 1/3 Solar (IP66)

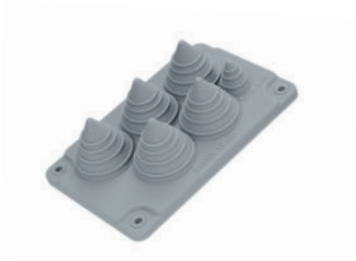

MC 5/1 Solar (IP66)

Light Grey RAL 7035	MBA1F13L11	MBA1F51L11
	UL 94 V-0 approved	UL 94 V-0 approved
Technical data		
Number of cables (pcs) x cable diameter (mm)	1 x 35 - 80 1 x 14 - 32 1 x 8 - 18	5 x 18 - 40 1 x 8 - 18 -
Total number of cables	3	5
Mounting hole size	130 x 88 mm	130 x 88 mm
Length (A) / Width (B) / Height (C) (mm)	155,6 / 100 / 91	155,6 / 100 / 91
Weight (g)	128	130
Package (pcs)	60	60

Dimensions

MC 1/3

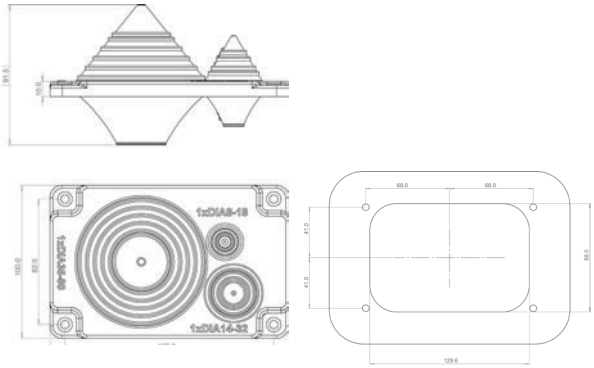

MC 5/1

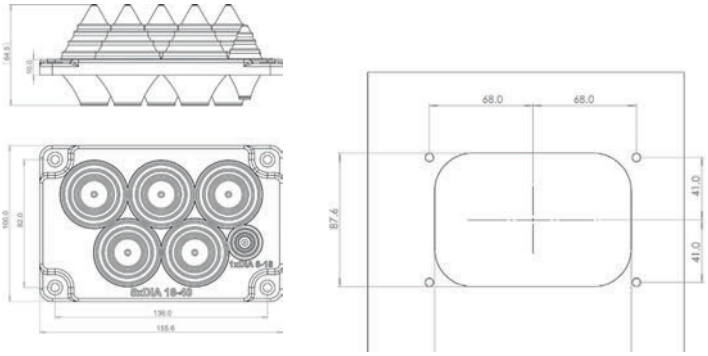

Cable entry plate RMC (IP65)

Patent-pending solution

Very quick, precise and easy way to insert cables

No need to use cutting, pliers, knives or other tools



- Cable gland plate used as a conductor entry point in an electrical cabinet; the enclosure wall thickness can vary from 1 to 4 mm
- For use with diverse cable sizes in both low and medium voltage power applications
- Suitable for rough industrial conditions indoors as well as extreme climatic conditions outdoors

Advantages

- Each cable entry point has a tab that can be peeled off to create an opening for quick insertion and pull-through operations without the need for cutting pliers, knives or other tools
- Pre-embossed, circular entry points guarantee a precise, clean and robust seal around the cable; no additional glands or gaskets required
- A high density of incoming/outgoing conductors can be installed with minimal space requirements

Technical specifications

- Feed-through membrane made of thermoplastic elastomer (TPE) with polypropylene glass fiber reinforcement (PP-GF)
- Cable entry points with various cross-sectional diameters (no pre-attached connectors)
- Available in two colors: black and light grey (RAL7035)
- Designed to match an FL21 flange size cut-out
- Standard M8 bolts used for mounting on the enclosure wall (bolts not included in package)
- High IP65 protection against the ingress of dust and water
- UL 94 V-0 flammability rating (selected versions)
- Operational ambient temperature range (material unstressed): -40 °C...+90 °C





	RMC 3 (IP65)	RMC 17 (IP65)
Grey (RAL 7035)	MBA9N07011	MBA1N17O11
Grey (RAL 7035) UL 94 V-0 approved	MBA9N07X11	MBA1N17X11
Black (RAL 9005) UL 94 V-0 approved	MBA9N07B11	MBA1N17B11
Technical data		
Number of cables (pcs) x cable diameter (mm)	4 x 7-10 3 x 12-57	4 x 5 -7 2 x 10-12 2 x 12-15 9 x 10-30
Total number of cables	7	17
Dimensions A / B / C (mm)	220 / 88 / 25,5	220 / 88 / 25,5
Weight (g)	131	134
Package (pcs)	100	100

Dimensions

RMC 3

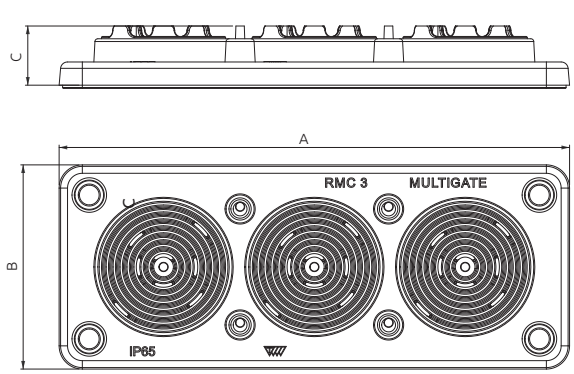

RMC 17

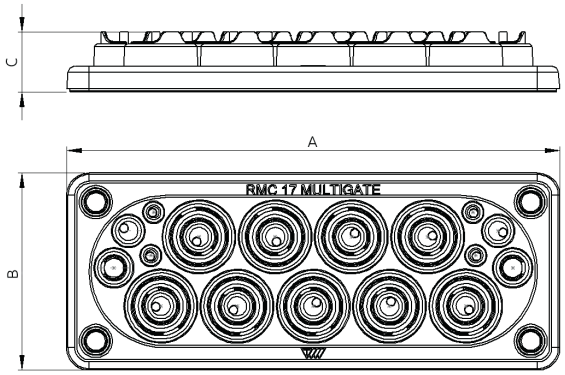

- Used as a conductor entry point in an electrical cabinet; the wall thickness can vary from 1-3,5 mm
- For use with diverse cable sizes in both low and medium voltage power applications
- Suitable for rough industrial conditions indoors as well as extreme climatic conditions outdoors

Advantages

- Each RGD has several cable entry points - tabs - that can be peeled off to create an opening for quick insertion and pull-through operations without the need for cutting pliers, knives or other tools
- Each tab has marking of cable diameter matching it written next to it
- Pre-embossed, circular entry points guarantee a precise, clean and robust seal around the cable; no additional glands or gaskets required

Technical specifications

- Made of thermoplastic elastomer (TPE)
- Designed to match M40, M50 and M60 size cut-out and diameter range from 10 to 54 mm:
  - M40: 10-34 mm cable
  - M50: 12-44 mm cable
  - M60: 12-54 mm cable
- Available in two colors: black and light grey (RAL7035)
- High IP64 protection against the ingress of dust and water
- Flammability rating according to UL 94 V-0
- Operational ambient temperature range (material unstressed): -40 °C...+100 °C

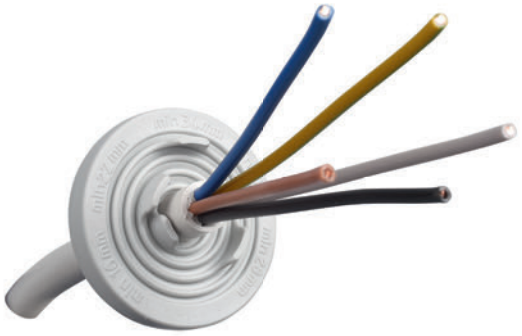

Order code	Type	Cable diameter (mm)	Color	Shade	Classification	Dimensions (mm) A	B	C	D	E	Weight (g)	Package (pcs)
MBB0540X11	T-RGDM 40	10-34	Grey	RAL 9035	UL 94 V-0	34 mm	40 mm	47 mm	16 mm	1,5-3 mm	10	400
MBB0540B11			Black	RAL 7005	UL 94 V-0							
MBB0550X11	T-RGDM 50	12-44	Grey	RAL 9035	UL 94 V-0	44 mm	50 mm	57 mm	16 mm	1,5-3 mm	13,2	250
MBB0550B11			Black	RAL 7005	UL 94 V-0							
MBB0560X11	T-RGDM 60	12-54	Grey	RAL 9035	UL 94 V-0	54 mm	60 mm	67 mm	16 mm	1,5-3 mm	16,4	200
MBB0560B11			Black	RAL 7005	UL 94 V-0							

Dimensions

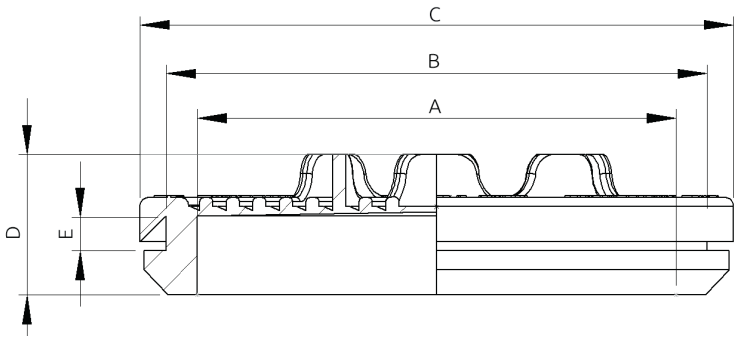

Reliable cable entry and protection for electrical enclosures

MH-B S cable entry plates provide a simple and effective solution for routing cables into electrical cabinets, control panels, and server racks. Designed for fast installation and retrofit applications, MH-B S plates offer basic protection against dust and large dirt particles while protecting cables from sharp cabinet edges.

The split design allows easy installation on existing cables, making MH-B S an ideal choice for upgrades and modifications without disassembling wiring.

Key Advantages
- Fast and easy installation
- Split design for retrofit applications
- Basic protection against dust and large dirt particles
- Protects cables from damage caused by sharp edges
- Suitable for standard industrial cut-outs

Typical applications
- Electrical cabinets
- Control panels
- Server racks
- Industrial enclosures







	MH-B 10 S	MH-B 16 S	MH-B 24 S
Black UL 94 V-0 ●	MBA10010S11	MBA12016S11	MBA14724S11
Technical data			
Cut-out size	65 × 36 mm	86 × 36 mm	112 × 36 mm
Dimensions	100 × 58 × 10 mm	120 × 58 × 10 mm	147 × 58 × 10 mm
Screw holes diamenter (mm)		5,5	
Weight (g)	50	57	67
Package (pcs)	100	100	100

Splitting cable entry plates

Splitting cable entry plates are compact system to route and seal pre-terminated cables

Insertion of pre-terminated cables

UL 94 V-0

Does
not affect warranty
of pre-terminated cables



Splitting cable entry plate for cables with attached connectors

Often with the cables come the connectors and very often the connectors can not be removed and re-attached. The delicate data cables, HDMI´s etc. are difficult or impossible to re-join at site. The splitting cable entry plate is the solution that lets the cables be installed with the connectors and on top of that the cables can be changed as often as wanted. Choose splitting cable entry plate for fast, safe and versatile installations.

Splitting cable entry plates SCG and MC are intended for leading through both low and medium power current cables, but also various kinds of tubing.

Splitting cable entry plates SCG and MC are new type of metal and plastic reinforced cable entry plate made of different types of polymers (TPE and PP-GF).

They meet the requirements of IP55 protection class without the need of any additional gaskets or grommets. This makes it very easy to use and provides many benefits for compact installation unit.

Splitting cable entry plates SCG and MC are suitable for both in- and outdoor application and operating temperature range is from -40 °C to +90 °C.







		SCG 1x3-35 (IP55)	SCG 2x3-35 (IP55)	SCG 6x3-20 (IP55)
Black UL 94 V-0	●	MBA4N01B11	MBA4N02B11	MBA4N63B11
Technical data				
Service temperature		-40 - +90	-40 - +90	-40 - +90
Dimensions (A / B / C) (mm)		77 / 60 / 40	136 / 60 / 40	220 / 60 / 40
Number of cables (pcs) x cable diameter (mm)		1 x 3-35	2 x 3-35	6 x 3-20
Total number of cables		1	2	6
Mounting hole size		SCG 1	SCG 2	SCG 6
Weight (g)		160	263	250
Package (pcs)		100	50	20

** Only for cables without connectors.*

Dimension of mounting hole

SCG 1

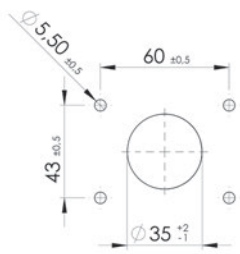

SCG 2

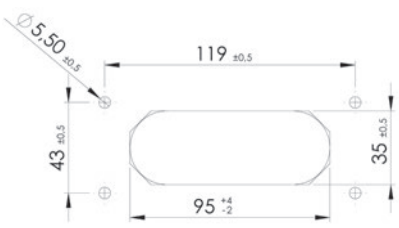

SCG 6









	MC 1x10-65 (IP66)	MC 2x10-65 (IP66)
Black ●	MBA1N10A11	-
Black UL 94 V-0 ●	MBA1N10B11	MBA2N10B11

Technical data		
Service temperature	-40 - +100	-40 - +100
Dimensions (A / B / C) (mm)	122,5 / 92,8 / 64	221 / 92 / 63,4
Number of cables (pcs) x cable diameter (mm)	1 x 10 - 65	1 x 10 - 65
Total number of cables	1	2
Mounting hole size	MC 1	MC 2
Weight (g)	568	1086
Package (pcs)	20	10

** Only for cables without connector*

Dimensions

MC 1

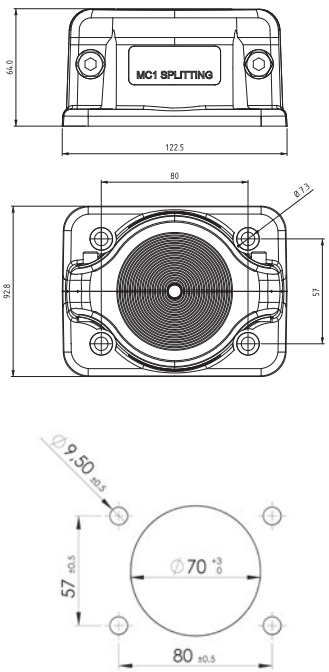

MC 2

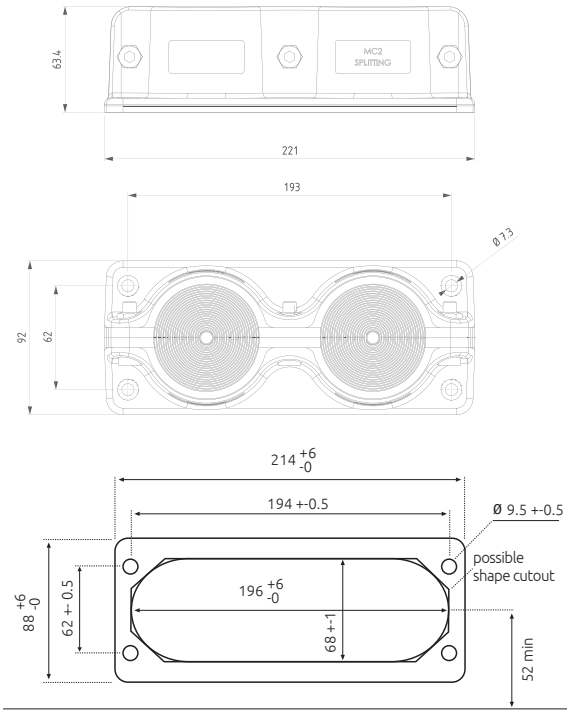

Size C (FL 21)

Cable Accessories

Splitting cable entry plates are compact system to route and seal pre-terminated cables

Bimetal

For copper and aluminium conductors

Up to

36kV



Shear Bolt Cable Lugs up to 12 kV

Shear-bolt lugs for terminating aluminium or copper conductors, rated up to 12 kV. Also suitable for low-voltage applications (0,6/1 kV).

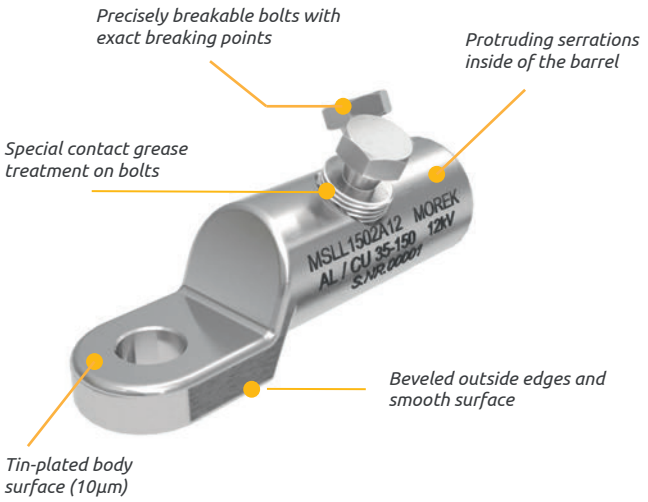

Morek's **Shear Bolt Cable Lugs** provide efficient and reliable termination for both aluminum and copper conductors tested in applications up to 12kV. Designed for simplicity and versatility, these lugs eliminate the need for crimping tools by using shear bolt technology, allowing installation with a standard wrench or spanner. The lugs are made from high-strength, tin-plated aluminum alloy and are coated with antioxidation grease, ensuring long-lasting performance and optimal conductivity.

Morek's Shear Bolt Cable Lugs are engineered for ease, reliability, and adaptability, offering a top-tier solution for terminating conductors without the need for specialized tools. With certified durability and compatibility, they are a practical choice for safe, efficient installations in diverse applications.

Compliance: Certified to EN 61238-1 Class A, suitable for applications with high short-circuit intensity.

Shear Bolt Technology:
Enables installation using basic tools, with no need for crimping or special equipment.

Range-Taking Design:
Accommodates conductors of various cross-sections, reducing the need for multiple lug sizes.

Durable and Safe Materials:
Made from high-strength, tin-plated aluminum alloy, suitable for aluminum and copper conductors.

Optimal Electrical Connection:
Shear bolts break at the exact torque required for reliable electrical performance.

Antioxidation Protection:
Bolts are treated with antioxidation grease, preventing corrosion and ensuring a clean electrical contact.

Indoor and Outdoor Compatibility:
Suitable for installations in both environments, supporting various conductor shapes and insulation types.

Morek's shear bolt lugs are tested to Class A under IEC 61238–1, ensuring their suitability for most industrial and electrical distribution networks. These compact lugs are compatible with widely-used termination kits and require minimal installation space, even for larger conductor sizes.



Palm opening size	MSLL35	MSLL50	MSLL51	MSLL70	MSLL95
M10	MSLL0351A10	MSLL0501A10	MSLL0502A10	-	-
M12	MSLL0351A12	MSLL0501A12	MSLL0502A12	MSLL0702A12	MSLL0951A12
M16	-	-	-	-	-
Technical data					
Conductor cross-section Al (mm²)					
RE Round, solid	6 - 35	10 - 50	10 - 50	16 - 70	16 - 95
RM Round, stranded	10 - 35	10 - 50	10 - 50	16 - 70	16 - 95
SE Sector shaped, solid	35	35 - 50	35 - 50	35 - 70	35 - 95
SM Sector shaped, stranded	35	35 - 50	35 - 50	35 - 70	35 - 95
Conductor cross-section Cu (mm²)					
RM Round, stranded	6 - 35	6 - 50	6 - 50	16 - 70	16 - 95
SM Sector shaped, stranded	6 - 35	6 - 50	6 - 50	16 - 70	16 - 95
RE Round, solid	6 - 35	6 - 35	6 - 35	23 - 35	16 - 35
No. of bolts Ø mm	1 / M10	1 / M10	2 / M10	2 / M12	1 / M12
Material of bolts	Al	Al	Al	Al	Al
L1 / L2 / l	53 / 40 / 18	62 / 51 / 28	62 / 51 / 30	90 / 75 / 40	65 / 52 / 24
W / D / d	24 / 16 / 9	25 / 20 / 11	25 / 20 / 11	28 / 22 / 12	25 / 25 / 14
Weight (g)	23	37	42	62	65
Package (pcs)	50	50	50	50	25

Suitable for aluminium and copper applications

Dimensions

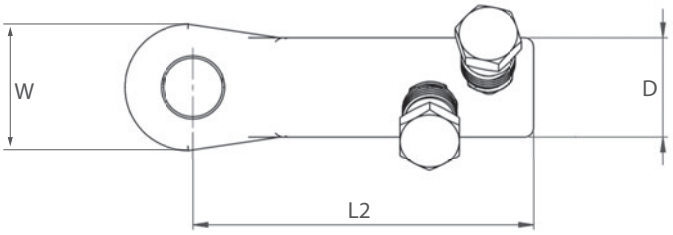

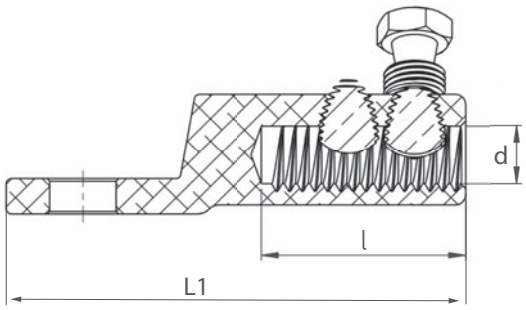



Palm opening size	MSLL96	MSLL150	MSLL240	MSLL300
M10	-	-	-	-
M12	MSLL0952A12	MSLL1502A12	MSLL2402A12	MSLL3002A12
M16	-	-	MSLL2402A16	MSLL3002A16
Technical data				
Conductor cross-section Al (mm²)				
RE Round, solid	16 - 95	35 - 150	50 - 240	150 - 300
RM Round, stranded	16 - 95	35 - 150	50 - 240	150 - 300
SE Sector shaped, solid	35 - 95	35 - 150	50 - 240	150 - 300
SM Sector shaped, stranded	35 - 95	35 - 120	50 - 240	150 - 300
Conductor cross-section Cu (mm²)				
RM Round, stranded	16 - 95	35 - 120	50 - 240	150 - 300
SM Sector shaped, stranded	16 - 95	35 - 120	50 - 240	150 - 300
RE Round, solid	16 - 35	35	-	-
No. of bolts Ø mm	2 / M12	2 / M16	2 / M18	2 / M22
Material of bolts	Al	Al	Al	Al
L1 / L2 / l	76 / 63 / 32	100 / 85 / 52	115 / 97 / 57	123 / 104 / 59
W / D / d	25 / 25 / 15	29 / 29 / 18	35 / 35 / 22	38 / 38 / 24,5
Weight (g)	82	120	250	280
Package (pcs)	25	40	15	10

Suitable for aluminium and copper applications

Dimensions

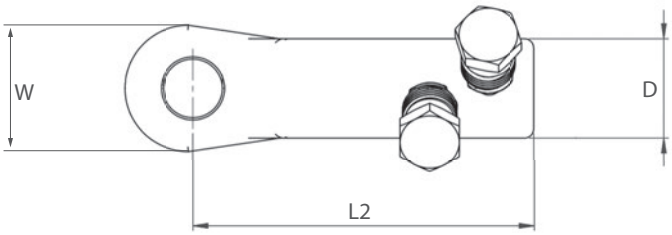

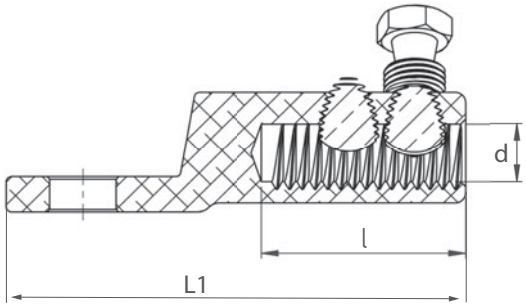

Shear Bolt Cable Connectors up to 12 kV

Shear Bolt connectors for joining aluminium or copper conductors, rated up to 12 kV. Also suitable for low-voltage applications (0,6/1 kV).

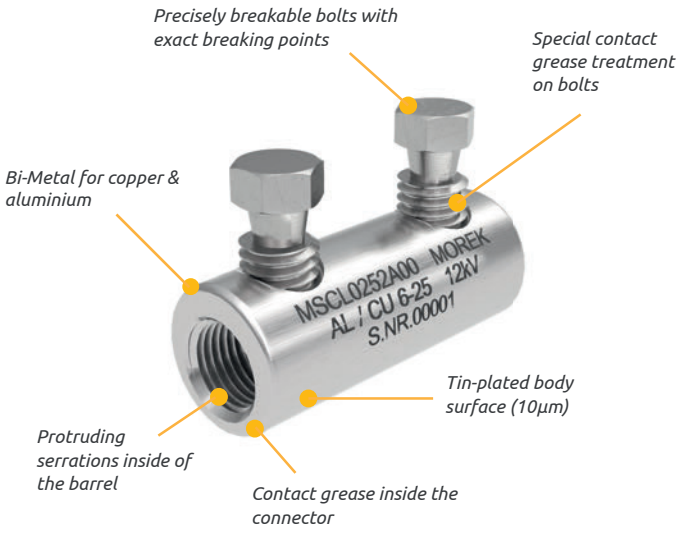

Morek's **Shear Bolt Cable Connectors** provide a secure and efficient solution for joining aluminum or copper conductors tested in applications up to 12kV. Utilizing shear bolt technology, these connectors enable installation without the need for crimping, using only a standard wrench or spanner. Constructed from high-strength, tin-plated aluminum alloy, Morek's shear bolt connectors offer excellent electrical and mechanical performance, making them suitable for a range of conductor sizes and configurations.

Morek's Shear Bolt Cable Connectors combine ease of installation with robust performance, providing an efficient solution for joining conductors without specialized tools. Backed by industry-standard certifications and built for durability, they meet the demands of industrial and distribution networks.

Compliance: Certified to EN 61238-1 Class A, ensuring suitability for applications requiring heat cycle and short-circuit resistance.

Easy Installation with Shear Bolt Technology:

Allows for quick and tool-free installation with basic tools, no crimping required.

Versatile Range-Taking Design:

Supports varying conductor cross-sections, reducing the need for multiple connector sizes.

Durable Materials:

Made of high-strength, tin-plated aluminum alloy, suitable for both aluminum and copper conductors.

Optimal Electrical Connection:

Shear bolts break at the exact torque required for reliable electrical performance.

Antioxidation Protection:

Treated with antioxidation grease to prevent corrosion and oxidation, ensuring long-lasting performance.

Indoor and Outdoor Compatibility:

Suitable for installations in diverse environments, supporting solid, stranded, sector-shaped, and round conductors with plastic or oil-impregnated insulation.

Tested according to IEC 61238-1 Class A, these connectors are ideal for electrical distribution and industrial networks where high short-circuit intensity may occur. Compactly designed, they also minimize required installation space, particularly advantageous for larger cable sizes.

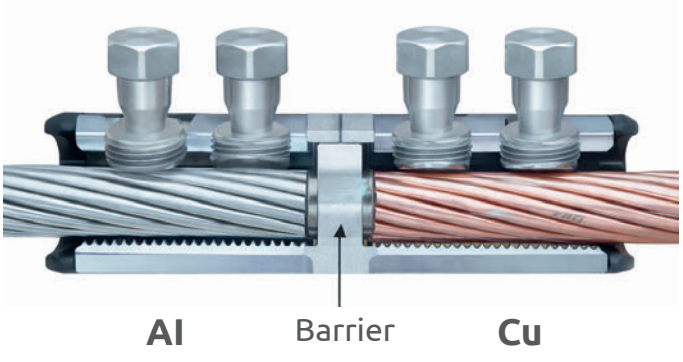






	MSCL16	MSCL25	MSCL50	MSCL95
	MSCL0162B00	MSCL0252A00	MSCL0502A00	MSCL0952A00
Technical data				
Conductor cross-section Al (mm²)				
RE Round, solid	1,5 - 16	10 - 35	10 - 50	25 - 95
RM Round, stranded	1,5 - 16	10 - 35	10 - 50	25 - 95
SE Sector shaped, solid	-	35	35 - 50	35 - 95
SM Sector shaped, stranded	-	35	35 - 50	35 - 95
Conductor cross-section Cu (mm²)				
RM Round, stranded	1,5 - 16	10 - 35	10 - 50	25 - 95
SM Sector shaped, stranded	1,5 - 16	10 - 35	10 - 50	25 - 95
RE Round, solid	1,5 - 16	6 - 25	10 - 35	25 - 35
No. of bolts Ø mm	2 / M6	2 / M8	2 / M10	2 / M12
Material of bolts	Brass	Al	Al	Al
L / l	30 / 14	40 / 17	37 / 17	54 / 24
D / d	12 / 6	16 / 9	18 / 10	25 / 14
Weight (g)	10	22	26	47
Package (pcs)	100	100	50	50

Suitable for aluminium and copper applications

Connector has inner parier to separate aluminium and copper conductors

Dimensions

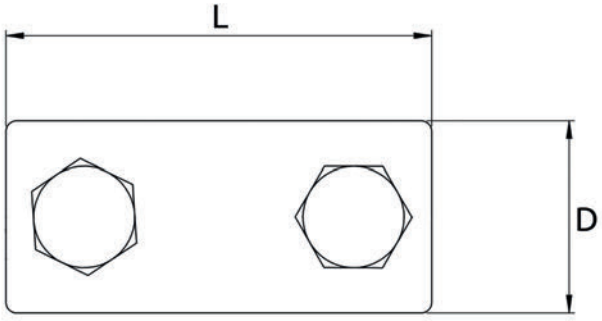

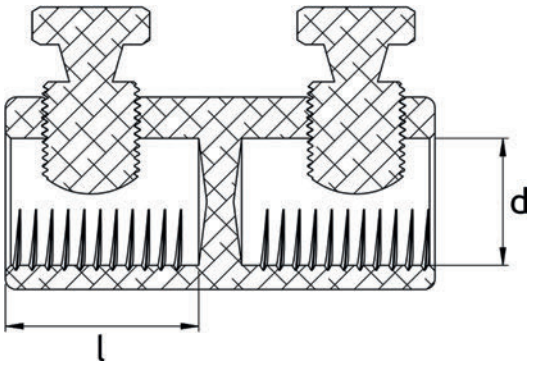



	MSCL150	MSCL240	MSCL241	MSCL300
	MSCL1502A00	MSCL2402A00	MSCL2404A00	MSCL3004A00
Technical data				
Conductor cross-section Al (mm²)				
RE Round, solid	25 - 150	120 - 240	50 - 240	150 - 300
RM Round, stranded	25 - 150	120 - 240	50 - 240	150 - 300
SE Sector shaped, solid	35 - 150	120 - 240	50 - 240	150 - 300
SM Sector shaped, stranded	35 - 120	120 - 240	50 - 240	150 - 300
Conductor cross-section Cu (mm²)				
RM Round, stranded	25 - 150	120 - 240	50 - 240	150 - 300
SM Sector shaped, stranded	25 - 150	120 - 240	50 - 240	150 - 300
RE Round, solid	25 - 35	-	-	-
No. of bolts Ø mm	2 / M16	2 / M18	4 / M18	4 / M22
Material of bolts	Al	Al	Al	Al
L / l	70 / 30	80 / 32	120 / 56	112 / 52
D / d	28 / 17	38 / 24	35 / 22	38 / 22
Weight (g)	87	162	220	265
Package (pcs)	35	25	20	20

Suitable for aluminium and copper applications

Connector has inner parier to separate aluminium and copper conductors

Dimensions

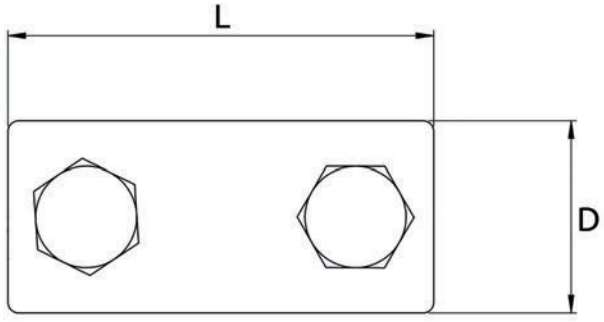

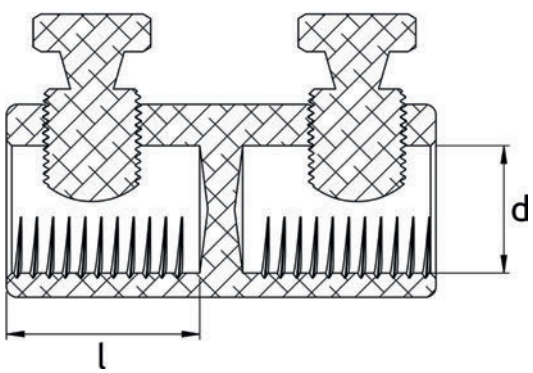

Shear Bolt Cable Lugs up to 36kV

Shear Bolt lugs are used for terminating aluminium or copper conductors in applications up to 36kV. May also be used for 1kV applications.

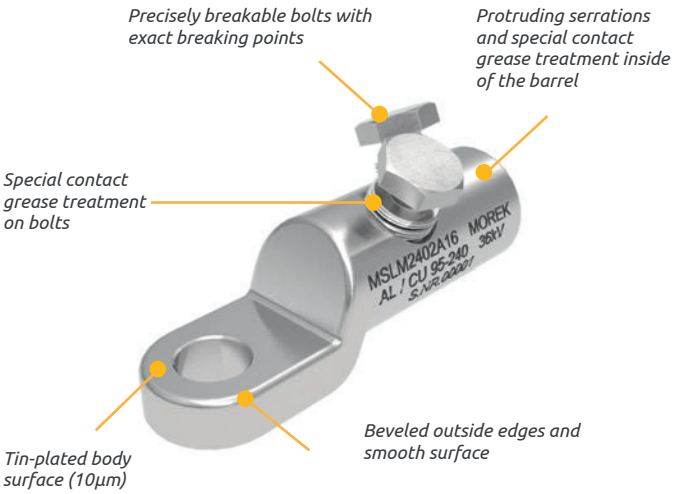

Morek's **Shear Bolt Cable Lugs** are engineered to provide secure and efficient termination for aluminum and copper conductors in high-voltage applications up to 36kV. Utilizing advanced shear bolt technology, these lugs can be installed with a standard wrench or spanner, eliminating the need for specialized crimping tools. Made from high-strength, tin-plated aluminum alloy, Morek's lugs offer excellent conductivity and durability, along with a watertight seal for both indoor and outdoor installations.

Morek's Shear Bolt Cable Lugs up to 36kV offer a reliable, easy-to-install solution that requires no special tools. Built to withstand high-intensity demands, these lugs deliver lasting performance and compatibility, meeting the needs of industrial and distribution networks.

Compliance: Certified to EN 61238-1 Class A, suitable for applications with high short-circuit intensity.

Easy Installation with Shear Bolt Technology:

Allows tool-free installation using basic tools, ensuring a secure connection without crimping.

Range-Taking Design:

Accommodates a wide range of conductor cross-sections, minimizing the need for multiple lug sizes.

High-Strength Materials:

Constructed from tin-plated aluminum alloy, suitable for aluminum and copper conductors, providing durability and conductivity.

Precise Torque for Optimal Connection:

Shear bolts break at the exact torque required for reliable electrical performance.

AntiOxidation Grease Treatment:

Both bolts and lug barrels are coated with antioxidation grease to prevent corrosion and ensure clean electrical contact.

Indoor and Outdoor Compatibility:

Designed for various conductor shapes and insulation types, supporting solid, stranded, sector-shaped, and round conductors with plastic or oil-impregnated paper isolation.

Certified according to IEC 61238-1 Class A, these lugs meet stringent standards for short-circuit and heat cycle resistance, making them ideal for electrical distribution and industrial networks with high-intensity short circuits.



Palm opening size	MSLM95	MSLM150	MSLM240	MSLM300
M12	MSLM0951A12	MSLM1501A12	MSLM2402A12	MSLM3002A12
M16	-	-	MSLM2402A16	MSLM3002A16
M20	-	-	-	-
Technical data				
Conductor cross-section Al (mm²)				
RE Round, solid	16 - 95	50 - 150	95 - 240	120 - 300
RM Round, stranded	16 - 95	50 - 150	95 - 240	120 - 300
SM Sector shaped, stranded	25 - 70	50 - 120	95 - 185	120 - 240
Conductor cross-section Cu (mm²)				
RM Round, stranded	16 - 70	35 - 120	95 - 240	120 - 300
SM Sector shaped, stranded	25 - 70	50 - 120	95 - 185	120 - 240
No. of bolts Ø mm	1 / M12	1 / M14	2 / M18	2 / M22
Material of bolts	Al	Al	Al	Al
L1 / L2 / l	76 / 60 / 32	95 / 78 / 42	112 / 95 / 57	125 / 105 / 67
W / D / d	32 / 24 / 14	29 / 29 / 16	33 / 33 / 20	38 / 38 / 24,5
Weight (g)	60	122	182	246
Package (pcs)	25	25	15	14

Suitable for aluminium and copper applications

Dimensions

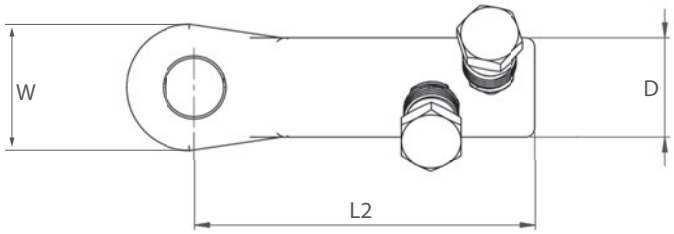

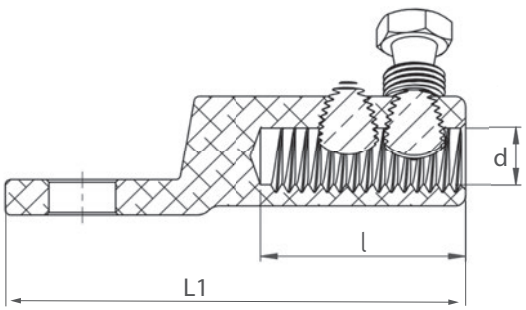







Palm opening size	MSLM400	MSLM630	MSLM1000
M12	MSLM4003A12	MSLM6303A12	-
M16	MSLM4003A16	MSLM6303A16	MSLM10004A16
M20	-	-	MSLM10004A20
2 x M12	-	-	-
Technical data			
Conductor cross-section Al (mm²)			
RE Round, solid	185 - 400	400 - 630	630 - 1000
RM Round, stranded	185 - 400	400 - 630	630 - 1000
SM Sector shaped, stranded	185 - 300	400 - 500	-
Conductor cross-section Cu (mm²)			
RM Round, stranded	185 - 400	400 - 630	630 - 1000
SM ector shaped, stranded	185 - 300	400 - 500	-
No. of bolts Ø mm	3 / M22	3 / M22	4 / M22 long
Material of bolts	Al	Al	Al
L1 / L2 / l	140 / 120 / 79	163 / 136 / 94	194 / 161 / 105
W / D / d	42 / 42 / 26	52 / 52 / 34	65 / 65 / 41
Weight (g)	367	605	1095
Package (pcs)	10	6	3

Suitable for aluminium and copper applications

Dimensions

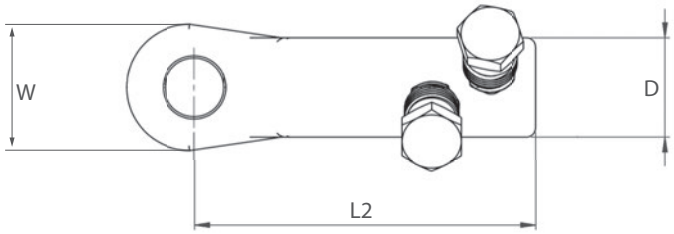

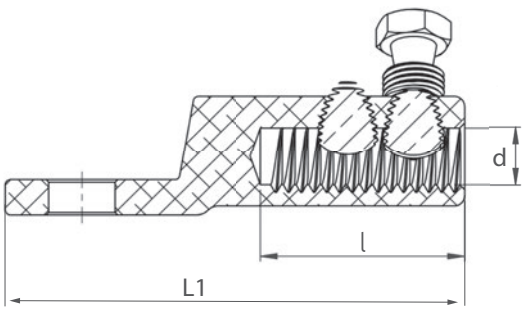



Palm opening size	MSLM400	MSLM630	MSLM1000
M12 x 20 x 2	MSLM4003A32	MSLM6303A32	MSLM10004A32
Technical data			
Conductor cross-section Al (mm²)			
RE Round, solid	185 - 400	400 - 630	630 - 1000
RM Round, stranded	185 - 400	400 - 630	630 - 1000
SM Sector shaped, stranded	185 - 300	400 - 500	630 - 800
Conductor cross-section Cu (mm²)			
RM Round, stranded	185 - 400	400 - 630	630 - 1000
SM Sector shaped, stranded	185 - 300	400 - 500	630 - 800
No. of bolts Ø mm	3 / M22	3 / M22	4 / M22 long
Material of bolts	Al	Al	Al
L1 / l (mm)	180 / 82	205 / 94,5	238 / 106
L2 / L3 / L4 / L5	159 / 153 / 121 / 115	180 / 174 / 142 / 136	207,5 / 200,5 / 165,5 / 158,5
D / d (mm)	42 / 26	52 / 34	65 / 41
Weight (g)	395	655	1200
Package (pcs)	10	6	3

Suitable for aluminium and copper applications

Dimensions

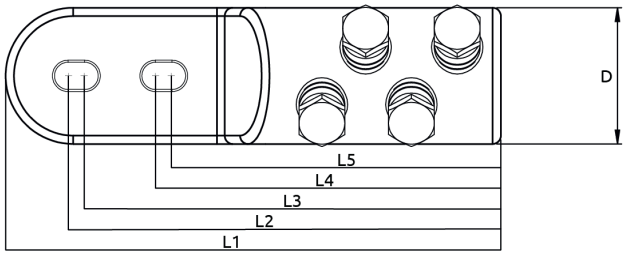

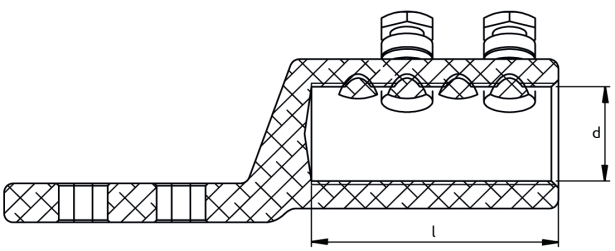

Shear Bolt Cable Connectors up to 36kV

Shear Bolt connectors are used for joining aluminium or copper conductors in applications up to 36kV. May also be used for 1kV applications.

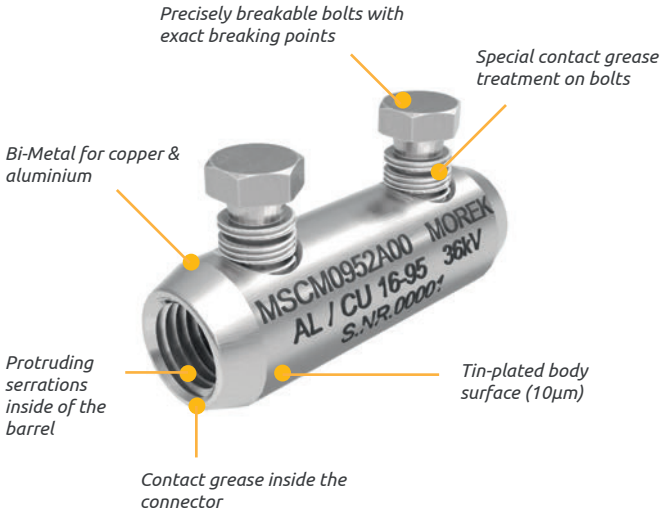

Morek's Shear Bolt Cable Connectors provide a robust and efficient solution for joining aluminum and copper conductors in high-voltage applications up to 36kV. Utilizing shear bolt technology, these connectors enable secure connections using only a standard wrench or spanner, eliminating the need for crimping tools. Constructed from high-strength, tin-plated aluminum alloy, Morek's connectors ensure exceptional conductivity and durability, suitable for both indoor and outdoor installations.

Morek's Shear Bolt Cable Connectors up to 36kV offer a practical and reliable solution for high-voltage connections, requiring no specialized tools. Built to withstand demanding conditions, these connectors provide dependable performance, supported by industry-standard certifications for high short-circuit and heat cycle resistance.

Compliance: Certified to EN 61238-1 Class A, suitable for applications that demand short-circuit durability and high electrical performance.

Tool-Free Shear Bolt Technology:

Allows for easy installation without the need for crimping, using only a wrench or spanner.

Range-Taking Design:

Supports a broad range of conductor cross-sections, reducing the need for multiple connector sizes.

Durable Material Composition:

Made from high-strength, tin-plated aluminum alloy, ensuring compatibility with both aluminum and copper conductors.

Precise Torque Control for Optimal Connection:

Shear bolts break at the exact torque required for reliable electrical performance.

AntiOxidation Grease Treatment:

Bolts and connector barrels are treated with antioxidation grease, preventing corrosion and maintaining clean electrical contact.

These connectors are tested according to IEC 61238-1 Class A standards, making them suitable for use in electrical distribution and industrial networks that experience high short-circuit intensities. Their compact design and compatibility with a range of termination kits ensure flexible, efficient installation across a variety of applications.

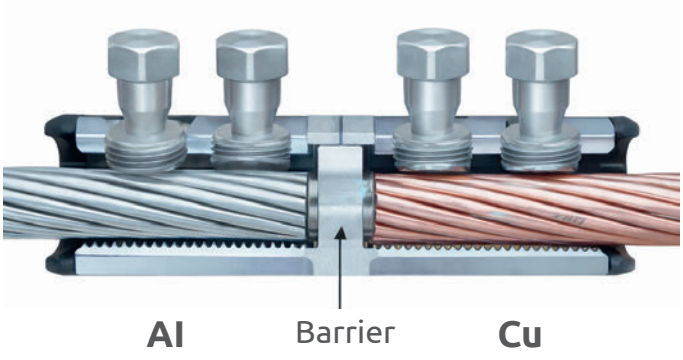



	MSCM95	MSCM150	MSCM240	MSCM300
	MSCM0952A00	MSCM1502A00	MSCM2404A00	MSCM3004A00
Technical data				
Conductor cross-section Al (mm²)				
RE Round, solid	16 - 95	50 - 150	95 - 240	120 - 300
RM Round, stranded	16 - 95	50 - 150	95 - 240	120 - 300
SM Sector shaped, stranded	25 - 70	50 - 120	95 - 185	120 - 240
Conductor cross-section Cu (mm²)				
RM Round, stranded	16 - 95	35 - 150	95 - 240	120 - 300
SM Sector shaped, stranded	25 - 70	50 - 120	95 - 185	120 - 240
No. of bolts Ø mm	2 / M12	2 / M14	4 / M18	4 / M22
Material of bolts	Al	Al	Al	Al
L / l	70 / 33	80 / 35	120 / 56	142 / 67
D / d	24 / 12,5	30 / 15,5	33 / 20	38 / 24,5
Weight (g)	74	146	230	400
Package (pcs)	30	25	15	10

Suitable for aluminium and copper applications

Connector has inner parier to separate aluminium and copper conductors

Dimensions

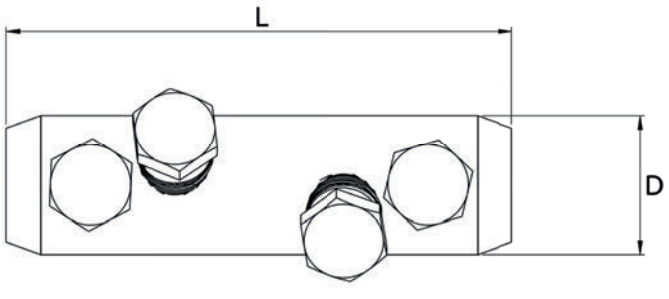

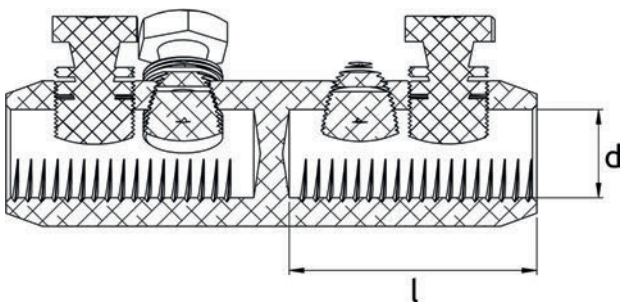



	MSCM400	MSCM630	MSCM1000
	MSCM4006A00	MSCM6306A00	MSCM10008A00
Technical data			
Conductor cross-section Al (mm²)			
RE Round, solid	185 - 400	400 - 630	630 - 1000
RM Round, stranded	185 - 400	400 - 630	630 - 1000
SM Sector shaped, stranded	185 - 300	400 - 500	-
Conductor cross-section Cu (mm²)			
RM Round, stranded	185 - 400	400 - 630	630 - 1000
SM Sector shaped, stranded	185 - 300	400 - 500	-
No. of bolts Ø mm	6 / M22	6 / M22	8 / M22 long
Material of bolts	Al	Al	Al
L / l	170 / 82	200 / 94	220 / 105
D / d	42 / 25,5	52 / 34	65 / 41
Weight (g)	580	815	1340
Package (pcs)	5	3	2

Suitable for aluminium and copper applications

Connector has inner parier to separate aluminium and copper conductors

Dimensions

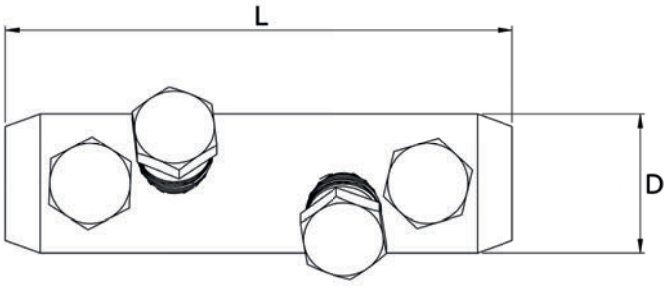

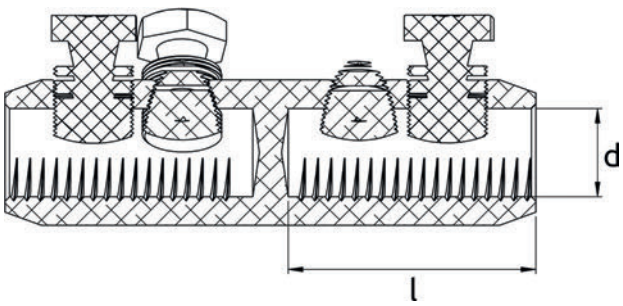

Clamp device for screw connectors

Morek shearbolt installation tool for holding screw connectors.

For fastening and easy installation of insulated and bare connectors with a diameter of 14 to 40 mm. Insulation according to IEC/EN 60900: 2004. Application also of very low temperatures down to -40 °C.



	Morek shearbolt installation tool
	MSCLTOOLB01
Technical data	
Clamping range (mm)	14 - 40
Color design	black
Material	Polyamid (PA)
Weight (g)	816
Package (pcs)	1

Heat-shrink Tubing, Breakouts and End Cups

Selection of reliable, high-quality products

Safe and efficient electrical connections

for any installation



The product portfolio includes medium and heavy-wall tubing, thin-wall tubing. Each product reflects Morek's commitment to quality, innovation, and ease of use.

All products are crafted from durable materials and meet industry standards, allowing professionals to work with dependable solutions in both indoor and outdoor environments. Every connection made with Morek products represents quality and assurance, developed and tested for long-term durability.

Thinwall Heat-shrink Tubing

Insulation and Protection for Low Voltage Cables.



The **MTW Thinwall Heat-shrink Tubing** by Morek provides reliable insulation and protection for low-voltage cables and components. This versatile tubing is crafted from cross-linked polyolefin, offering flexibility, durability, and ease of installation, ideal for applications that demand a balance of protection and minimal added bulk. UV-stabilized (black version) and available in various colors, including yellow/green, MTW tubing supports a range of environments and visual coding needs.

Morek's MTW Thinwall Heat-shrink Tubing represents our commitment to quality, flexibility, and innovation, offering customers a dependable solution for various electrical insulation needs. With consistent performance and industry compliance, Morek's MTW tubing is an essential choice for professionals seeking efficient and lasting cable protection.

High Electrical and Mechanical Strength:

Delivers reliable insulation and stability for low-voltage applications.

Thinwall, Durable Construction:

UV-stabilized Thinwall polyolefin (black version) provides effective protection against radiation and weathering.

Safe and Environmentally Friendly:

Halogen-free, silicone-free, and free from lead and aluminum, ensuring a non-corrosive, non-toxic solution.

Compliance and Versatile Design:

Meets RoHS and REACH regulations and is available in black and various colors upon request, supporting versatile installation needs.

Extended Shelf Life:

Unlimited shelf life under normal storage conditions.

Available in black, yellow/green, and other colors, ideal for color-coded cable installations in both indoor and outdoor settings.

Compliance: CENELEC EN50655

Dimensions



MTW Thinwall Heat-shrink Tubing

1m length order code	Full coil order code	Size (mm)	As supplied (mm)	After recovered (mm)		Full coil length (m)
			D (Min.)	d (Max.)	w (Min.)	
MTWA01206**B11**	MTWA01206**B10**	1,2/0,6	1,2	0,6	0,33	200
MTWA01608**B11**	MTWA01608**B10**	1,6/0,8	1,6	0,8	0,36	200
MTWA02412**B11**	MTWA02412**B10**	2,4/1,2	2,4	1,2	0,42	200
MTWA03216**B11**	MTWA03216**B10**	3,2/1,6	3,2	1,6	0,42	200
MTWA04824**B11**	MTWA04824**B10**	4,8/2,4	4,8	2,4	0,52	100
MTWA06432**B11**	MTWA06432**B10**	6,4/3,2	6,4	3,2	0,54	100
MTWA08040**B11**	MTWA08040**B10**	8,0/4,0	8,0	4,0	0,54	100
MTWA09548**B11**	MTWA09548**B10**	9,5/4,8	9,5	4,8	0,54	100
MTWA12764**B11**	MTWA12764**B10**	12,7/6,4	12,7	6,4	0,62	100
MTWA16080**B11**	MTWA16080**B10**	16,0/8	16,0	8,0	0,67	100
MTWA19095**B11**	MTWA19095**B10**	19,0/9,5	19,0	9,5	0,75	100
MTWA25412**B11**	MTWA25412**B10**	25,4/12,7	25,4	12,7	0,85	50
MTWA31815**B11**	MTWA31815**B10**	31,8/15,9	31,8	15,9	0,85	50
MTWA38119**B11**	MTWA38119**B10**	38,1/19,1	38,1	19,1	0,96	50
MTWA50825**B11**	MTWA50825**B10**	50,8/25,4	50,8	25,4	0,97	25
MTWA60030**B11**	MTWA60030**B10**	60,0/30,0	60,0	30,0	1,10	25
MTWA76238**B11**	MTWA76238**B10**	76,2/38,1	76,2	38,1	1,17	25
MTWA10150**B11**	MTWA10150**B10**	101,6/50,8	101,6	50,8	1,30	25
MTWA12060**B11**	MTWA12060**B10**	120,0/60,0	120,0	60,0	1,30	25
MTWA15276**B11**	MTWA15276**B10**	152,4/76,2	152,4	76,2	1,30	15

List of products MTW available in different colors

	Available colors	For the colour version replace the third letter from the end in the ordering code
	Black	**B** (B10/B11)
	Clear	**C** (C10/C11)
	Blue	**N** (N10/N11)
	Green	**G** (G10/B11)
	Red	**R** (R10/R11)
	Yellow	**Y** (Y10/Y11)
	Yellow/Green	**X** (X10/X11)

Other colors and lengths upon request.

Mediumwall Heat-shrink Tubing

Insulation and core protection for low and medium voltage cables.



Morek's **MMWT Heat-shrink Tubing** is engineered to provide top-quality insulation, protection and sealing for low and medium voltage cable accessories and electrical components. This Mediumwall, cross-linked polyolefin tubing is ideal for low and medium voltage cables, delivering robust mechanical strength and exceptional electrical properties.

The MMWT tubing offers a durable solution that withstands UV radiation, weathering and environmental pollutants, making it well-suited for both indoor and outdoor applications, including offshore environments.

Compliance: CENELEC EN50655

Reliable Electrical and Mechanical Strength:
Ensures stable insulation and protection for low and medium voltage applications.

Durable Material Composition:
UV-stabilized, halogen-free, and silicone-free, with non-corrosive, non-toxic properties, and free from lead and aluminum.

Adhesive Options:
Available with or without a hot-melt adhesive coating to suit various sealing and moisture-proofing needs.

Compliance and Approvals:
Meets RoHS and REACH regulations and is approved for offshore applications, ensuring environmentally responsible and safe usage.

High Shrink Ratio and Color:
Black, with a 3:1 shrink ratio, enabling a tight, secure fit over various cable sizes and shapes.

Extended Shelf Life:
Unlimited shelf life under normal storage conditions.

Dimensions

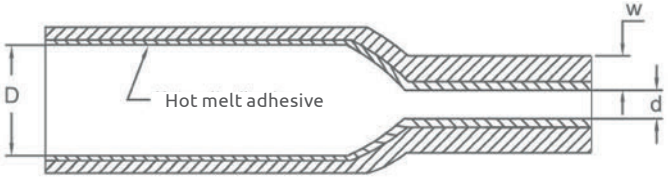

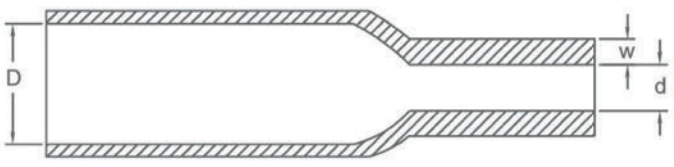

MMWT Mediumwall tubing with adhesive

		As supplied (mm)	After recovered (mm)		
Order code	Size (mm)	D (Min.)	d (Max.)	w (Min.)	Standard Length (mm)
MMWT00802A10	8/2	8	2	1,8	1000
MMWT01203A10	12/3	12	3	1,8	1000
MMWT01905A10	19/5	19	5	2,0	1000
MMWT02206A10	22/6	22	6	2,4	1000
MMWT02806A15	28/6	28	6	2,7	1000
MMWT03308A10	33/8	33	8	2,7	1000
MMWT04012A10	40/12	40	12	2,7	1000
MMWT05516A10	55/16	55	16	2,7	1000
MMWT06519A10	65/19	65	19	2,9	1000
MMWT07522A10	75/22	75	22	3,0	1000
MMWT09525A10	95/25	95	25	3,5	1000
MMWT11534A10	115/34	115	34	3,5	1000
MMWT14042A10	140/42	140	42	3,5	1000

MMWT Mediumwall tubing without adhesive

		As supplied (mm)	After recovered (mm)		
Order code	Size (mm)	D (Min.)	d (Max.)	w (Min.)	Standard Length (mm)
MMWT00802U10	8/2	8	2	1,7	1000
MMWT01203U10	12/3	12	3	1,7	1000
MMWT01905U10	19/5	19	5	2,0	1000
MMWT02206U10	22/6	22	6	2,4	1000
MMWT02806U10	28/6	28	6	2,6	1000
MMWT03308U10	33/8	33	8	2,6	1000
MMWT04012U10	40/12	40	12	2,6	1000
MMWT05516U10	55/16	55	16	2,7	1000
MMWT06519U10	65/19	65	19	2,9	1000
MMWT07522U10	75/22	75	22	3,0	1000
MMWT09525U10	95/25	95	25	3,1	1000
MMWT11534U10	115/34	115	34	3,2	1000
MMWT14042U10	140/42	140	42	3,2	1000
MMWT16050U10	160/50	160	50	3,2	1000
MMWT18058U10	180/58	180	58	3,3	1000
MMWT20055U10	200/55	200	55	3,7	1000

Heavywall Heat-shrink Tubing

Insulation and Outer Sealing for Low and Medium Voltage Cables



The **MHWT Heavywall Heat-shrink Tubing** by Morek is designed for robust insulation, protection and re-jacketing of low and medium voltage cables and accessories. This Heavywall tubing is crafted from durable, cross-linked polyolefin, combining electrical and mechanical properties to withstand demanding environments and ensure reliable performance in both indoor and outdoor installations, including offshore applications.

With Morek's MHWT tubing, customers gain a reliable, high-quality solution that meets industry standards for safety and durability. Backed by our commitment to quality and customer support, MHWT tubing ensures effective insulation and protection across various applications.

Compliance: CENELEC EN50655

Superior Electrical and Mechanical Strength:
Ensures reliable insulation for low and medium voltage applications, offering stability and protection.

Heavywall Material Composition:
Thick, UV-stabilized polyolefin provides exceptional durability against radiation and weathering.

Safe and Non-Toxic:
Halogen-free, silicone-free, and free from lead and aluminum, offering a non-corrosive, non-toxic option.

Adaptable Adhesive Options:
Available with or without an internal hot-melt adhesive coating for customized sealing needs.

Compliance and Approvals:
RoHS and REACH compliant, suitable for offshore environments.

High Shrink Ratio and Versatile Design:
Black with a high shrink ratio, fitting securely over various cable sizes and irregular shapes.

Extended Shelf Life:
Unlimited shelf life under normal storage conditions.

Dimensions

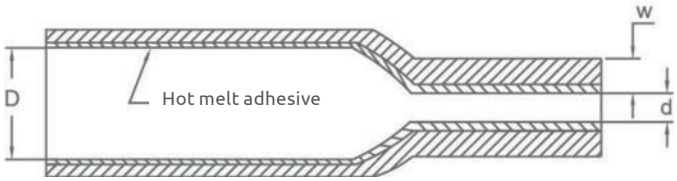

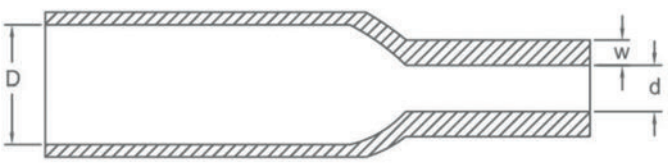

MHWT Heavywall tubing with adhesive

		As supplied (mm)	After recovered (mm)		
Order code	Size (mm)	D (Min.)	d (Max.)	W (Min.)	Standard Length (mm)
MHWT00903A10	9/3	9	3	2	1000
MHWT01605A10	16/5	16	5	2,4	1000
MHWT01905A10	19/5	19	5	2,4	1000
MHWT02206A10	22/6	22	6	2,7	1000
MHWT03308A10	33/8	33	8	3,2	1000
MHWT04012A10	40/12	40	12	4	1000
MHWT05516A10	55/16	55	16	4	1000
MHWT06519A10	65/19	65	19	4	1000
MHWT07522A10	75/22	75	22	4	1000
MHWT09525A10	95/25	95	25	4,2	1000
MHWT10529A10	105/29	105	29	4,2	1000
MHWT11534A10	115/34	115	34	4,2	1000
MHWT13036A10	130/36	130	36	4,2	1000
MHWT14042A10	140/42	140	42	4,2	1000
MHWT16050A10	160/50	160	50	4,2	1000
MHWT18058A10	180/58	180	58	4,2	1000

MHWT Heavywall tubing without adhesive

		As supplied (mm)	After recovered (mm)		
Order code	Size (mm)	D (Min.)	d (Max.)	W (Min.)	Standard Length (mm)
MHWT00903U10	9/3	9	3	2,0	1000
MHWT01605U10	16/5	16	5	2,4	1000
MHWT01905U10	19/5	19	5	2,4	1000
MHWT02206U10	22/6	22	6	2,7	1000
MHWT03308U10	33/8	33	8	3,2	1000
MHWT04012U10	40/12	40	12	3,7	1000
MHWT05516U10	55/16	55	16	3,7	1000
MHWT06519U10	65/19	65	19	3,7	1000
MHWT07522U10	75/22	75	22	3,7	1000
MHWT09525U10	95/25	95	25	3,7	1000
MHWT10529U10	105/29	105	29	4,0	1000
MHWT11534U10	115/34	115	34	4,0	1000
MHWT13036U10	130/36	130	36	4,0	1000
MHWT14042U10	140/42	140	42	4,0	1000
MHWT16050U10	160/50	160	50	4,0	1000
MHWT18058U10	180/58	180	58	4,1	1000

Heat-shrink Low Voltage Breakouts

Heat-shrink Low voltage breakouts up to 1kV



Morek's **Heat-shrink Low Voltage Breakouts** are designed to provide reliable insulation and sealing for multi-core cables up to 1kV. Engineered for durability, these breakouts are made from thermally stabilized, cross-linked polyolefin, blended with synthetic rubber to deliver excellent electrical insulation, UV resistance and weatherproofing. The black-colored breakouts are available with two, three, four or five fingers, each coated with either a polyamide-based hot melt adhesive or rubber mastic (upon request), ensuring a watertight environmental seal.

With Morek's Heat-shrink Low Voltage Breakouts, customers receive a product that meets high standards of quality, durability and flexibility. Ideal for a wide range of low-voltage applications, these breakouts ensure that cables remain secure, insulated, and sealed against moisture and environmental factors.

Reliable Electrical Insulation:

Designed for low voltage (up to 1kV) applications, providing essential insulation for cable crutches.

Durable and UV Resistant:

Constructed from UV-stabilized, cross-linked polyolefin, protecting against environmental degradation.

Customizable Sealing Options:

Spiral-coated with polyamide hot melt adhesive for secure sealing; rubber mastic coating available on request.

Material Composition:

Blended with synthetic rubber and fire-retardant additives (optional), with resistance to oxidation, ozone, and other environmental factors.

Efficient Design:

Available in black, with options for two to five fingers to fit various cable configurations.

When heated above 125°C, the LV breakouts shrink to a predetermined size, creating a tight, waterproof seal over the cable crutch. The hot melt adhesive or mastic sealant provides added protection against moisture, making these breakouts an ideal solution for environments where cables require robust, long-lasting insulation.

Dimensions

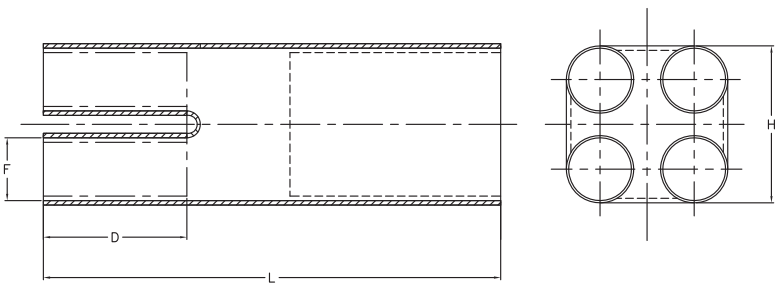

MHLB Heat-shrinkable Low Voltage Breakouts

Order code	Breakout main diameter (H)		Finger Diameter (F)		Full Length	Finger Length
	R* (mm)	S* (mm)	R* (mm)	S* (mm)	L (mm)	D (mm)
LV Breakout 2-Fingers Models						
MHLB03310B2	10,0	33,0	3,0	14,0	90,0	20,0
MHLB06022B2	22,0	60,0	6,7	24,0	120,0	35,0
LV Breakout 3-Fingers Models						
MHLB02808B3	8,5	28,0	2,5	12,0	70,0	23,0
MHLB04514B3	14,0	45,0	4,0	15,0	110,0	20,0
MHLB06022B3	22,0	60,0	8,0	26,0	185,0	45,0
MHLB08033B3	33,0	80,0	16,0	36,0	210,0	50,0
MHLB11033B3	33,0	110,0	16,0	40,0	210,0	50,0
MHLB11047B3	47,0	110,0	20,0	48,0	225,0	75,0
MHLB12547B3	47,0	125,0	20,0	55,0	250,0	75,0
MHLB14054B3	54,0	140,0	27,0	62,0	240,0	65,0
MHLB15554B3	54,0	155,0	27,0	62,0	240,0	65,0
LV Breakout 4-Fingers Models						
MHLB02808B4	8,5	28,0	1,8	10,0	70,0	23,0
MHLB03814B4	14,0	38,0	3,2	15,0	105,0	25,0
MHLB05014B4	14,0	50,0	3,2	15,0	105,0	25,0
MHLB05525B4	25,0	55,0	6,0	20,0	180,0	45,0
MHLB06525B4	25,0	65,0	6,0	25,0	180,0	45,0
MHLB07222B4	22,0	72,0	8,5	25,0	190,0	45,0
MHLB10033B4	33,0	100,0	14,0	35,0	215,0	50,0
MHLB12547B4	47,0	125,0	20,0	45,0	245,0	72,0
LV Breakout 5-Fingers Models						
MHLB05015B5	15,0	50,0	3,2	15,0	105,0	30,0
MHLB08033B5	33,0	80,0	9,0	27,0	215,0	60,0
MHLB10233B5	33,0	102,0	9,0	35,0	215,0	60,0

LV Breakout 6-Fingers Model

	Breakout main dia. (H)		Finger F1 Dia.		Finger F2 Dia.		Full Length	Finger Length
Order code	R* (mm)	S* (mm)	R* (mm)	S* (mm)	R* (mm)	S* (mm)	L (mm)	D (mm)
MHLB10033B6	33,0	100,0	6,0	19,0	12,0	38,0	215,0	50,0

* **S:** As Supplied
R: Fully Recovered

Heat-shrink End Caps

Designed to protect and insulate the unused ends of cables, safeguarding them from environmental effects.

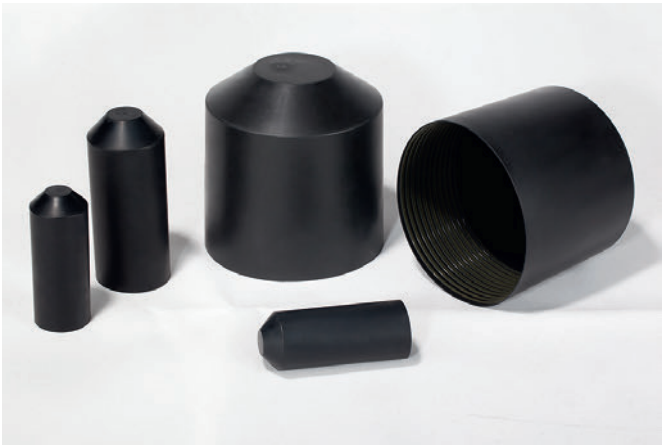

Morek's **MHLC Heat-shrinkable End Caps** are designed to protect and insulate the unused ends of cables, safeguarding them from environmental effects. Constructed from thermally stabilized, cross-linked polyolefin, these end caps offer reliable insulation and are pre-coated with a yellowish, translucent hot melt adhesive for a secure, moisture-resistant seal. Available in both film and spiral coating forms, these end caps can accommodate various cable types, including PVC, XLPE, PILC and rubber jackets and are suitable for both pressurized and unpressurized applications.

Morek's MHLC Heat-shrinkable End Caps deliver consistent, high-quality insulation and protection for a wide range of applications. Built for durability and flexibility, they meet stringent industry standards and provide reliable sealing and protection, backed by Morek's commitment to quality and customer satisfaction.

Reliable Insulation and Protection:

Ensures environmental protection and insulation for unused cable ends, preventing damage and exposure.

Durable Composition:

UV-resistant and made from cross-linked polyolefin, providing protection against oxidation, ozone, and harsh conditions.

Versatile Adhesive Options:

Coated with polyamide hot melt adhesive in either film form for pressurized cables or spiral form for unpressurized cables.

Flexible Applications:

Suitable for a wide range of electrical and telecommunications cables, with non-return air valves available for pressurized telecom cables.

Efficient and Secure Design:

Black color with pre-applied adhesive coating, ensuring quick and easy installation.

Upon heating above 125°C, MHLC end caps shrink to form a tight seal over the cable end, providing a barrier against moisture, UV, and other environmental effects. The adhesive layer ensures a strong bond, making these end caps ideal for both industrial and outdoor installations.

Dimensions

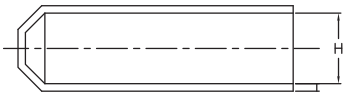

RECOVERED END CAP

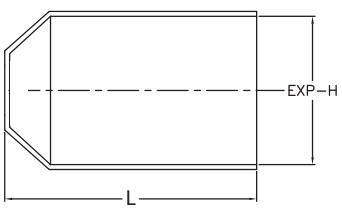

EXPANDED END CAP

MHLC Heat-shrinkable End Caps

	End Cap Dimension mm		Cable Diameter (H)	
Order code	EXP-H (mm)	Length (L)	min (mm)	max (mm)
MHLC01003B0	10,0/3,0	35	4	9
MHLC01504B0	15,0/4,5	45	5	13
MHLC02006B0	20,0/6,0	63	7	17
MHLC02508B0	25,0/8,5	70	10	22
MHLC04014B0	40,0/14,5	102	17	35
MHLC04014BX	40,0/14,5	190	17	35
MHLC06324B0	63,0/24,0	118	28	55
MHLC06324BX	63,0/24,0	175	28	55
MHLC07532B0	75,0/32,0	133	37	65
MHLC07532BX	75,0/32,0	175	37	65
MHLC07838B0	78,0/38,0	130	44	70
MHLC10645B0	106,0/45,0	164	52	95
MHLC10057B0	100,0/57,0	155	65	90
MHLC12057B0	120,0/57,0	155	65	110
MHLC14557B0	145,0/57,0	155	65	135

Heat-shrink sets for cables up to 1kV

Suitable for low voltage, high-performance insulation needs.



Morek's **Low Voltage Kits** provide a complete solution for the termination and jointing of cables up to 1kV. Available in two main types—MSLS Termination Kits and MSCS Joint Kits—these heat-shrink sets are designed to facilitate secure, durable connections for both aluminum and copper conductors. Each kit includes all necessary components, such as shear bolt cable lugs, sanding and cleaning materials, and installation instructions, ensuring a straightforward and reliable installation process.

Both the MSLS and MSCS kits are designed for low voltage installations in diverse environments, offering protection and ease of use for contractors and installers working on indoor and outdoor projects.

Certified according to EN61238-1 class A

For Applications up to 1kV:

Engineered to meet the demands of low-voltage cable terminations and joints.

Versatile Compatibility:

Ideal for cables with PVC or XLPE insulation, accommodating 3, 4, or 5 core configurations.

Shear Bolt Cable Lugs:

Included in both kits, compatible with aluminum and copper conductors for reliable connections.

Complete Installation Materials:

Includes sanding and cleaning supplies, ensuring optimal contact surfaces and reliable insulation.

Indoor and Outdoor Use:

Designed to withstand varied environmental conditions, providing flexibility for diverse installations.

Heat-Shrink Technology:

High-quality heat-shrink tubes and terminations ensure secure sealing and simplify the installation process.

MSLS Termination Kits

Order code	Conductor size	Lugs	Qty of cores
MSLS0351A10	Al / Cu 6 - 35 mm²	4 x MSLL0351A10	4
MSLS0701A12	Al / Cu 25 - 70 mm²	4 x MSLL0951A12	4
MSLS1202A12	Al / Cu 70 - 120 mm²	4 x MSLL1502A12	4
MSLS2402A12	Al / Cu 120 - 240 mm²	4 x MSLL2402A12	4





The **MSLS Termination Kits** are specifically designed for terminating low voltage cables with plastic insulation and an outer plastic sheath. Suitable for both indoor and outdoor use, these kits are available for 3, 4, and 5 core cables and come with high-quality heat-shrink tubes that ensure a secure and reliable seal.

- **Shear Bolt Cable Lugs Included:**
  Supports aluminum and copper conductors.
- **Comprehensive Materials:**
  Includes sanding and cleaning supplies for optimal contact and sealing.
- **Easy Installation:**
  High-quality heat-shrink terminations simplify the process, reducing installation time and effort.

Please contact your Customer Service representative for information on kits for 3 and 5 core cables.

MSCS Joint Kits

Order code	Conductor size	Connectors	Qty of cores
MSCS0162A00	Al / Cu 2,5 - 16 mm²	4 x MSCL0162B00	4
MSCS0352A00	Al / Cu 10 - 35 mm²	4 x MSCL0252A00	4
MSCS0502A00	Al / Cu 16 - 50 mm²	4 x MSCL0502A00	4
MSCS0952A00	Al / Cu 25 - 95 mm²	4 x MSCL0952A00	4
MSCS1202A00	Al / Cu 70 - 150 mm²	4 x MSCL1502A00	4
MSCS2404A00	Al / Cu 95 - 240 mm²	4 x MSCL2404A00	4
MSCS3004A00	Al / Cu 150 - 300 mm²	4 x MSCL3004A00	4



The **MSCS Joint Kits** enable secure jointing of low voltage cables with plastic insulation and outer sheaths, providing the same reliable sealing as the termination kits. These kits also include shear bolt cable lugs, sanding and cleaning materials, and installation instructions.

- **Bolt Cable Lugs Included:**
  Compatible with both aluminum and copper conductors.
- **Heat-Shrink Tubes for Core and Outer Sheath:**
  Provides durable insulation for the entire joint, supporting long-term reliability.
- **User-Friendly Assembly:**
  Designed for easy handling and secure installation, ensuring dependable connections.

Please contact your Customer Service representative for information on kits for 3 and 5 core cables.

Gel joints Break

Fastest way to make an underground connection!



Morek's **Gel Joints Break series** is a gel-insulated jointing system designed for **low-voltage underground cable connections up to 1 kV**. The system enables rapid installation while providing secure electrical insulation for both **main and shunted connections, supporting single-pole and multi-pole configurations.**

Each joint is pre-filled **with cross-linked insulating gel**, eliminating the need for resin casting or additional sealing compounds. This design ensures consistent insulation performance, reliable mechanical stability, and long-term watertight sealing across a wide range of installation conditions.

The Gel Joints Break series **combines installation efficiency with robust operational performance**, allowing durable and maintenance-friendly underground connections. Engineered to comply with applicable safety and performance standards, the system provides a **long-term solution for demanding underground and submerged applications.**

Compliance: EN 50393 (0.6/1kV), EN 60529, RoHS Directive 2011/65/EC, and EN 60695-2-11.
Protection Level: IP68, suitable for submerged conditions
Operating Temperature: -20°C to +90°C

Underground Joint Performance

Designed for low-voltage underground cable jointing, providing mechanically stable connections with permanent watertight sealing for direct burial installations.

UV light & Thermal Resistance

Rated for continuous operation in ambient temperatures from –20 °C to +90 °C. Resistant to UV radiation, moisture ingress, chemicals, and common underground contaminants.

Installation Environment Compatibility

Suitable for indoor and outdoor use, including underground and submerged conditions. Compatible with solid, stranded, sector-shaped, and round conductors with various insulation materials.

Insulation System

Incorporates internal phase separators or modular insulated terminals, allowing configurations of up to five phases (max. conductor cross-section 35 mm²) with high dielectric strength and controlled phase spacing.

Gel Insulation Technology

Filled with cross-linked insulating gel that ensures stable electrical insulation, prevents conductor movement, and eliminates the need for resin or compound casting while maintaining long-term sealing performance.

Re-Enterable Design

Joint can be reopened and reassembled for inspection, modification, or maintenance without degradation of insulation or sealing performance.

Kit content*

- Shell
- Tie-wraps
- Separator





	Break 25	Break 30	Break 50	Break 50Y	Break 100
Order code	MBG0025A24	MBG0030A24	MBG0050A24	MBG0050Y24	MBG0100A24
Dimensions A / B / C (mm)	70 / 42 / 24	100 / 59 / 34	165 / 62 / 36	180 / 105 / 36	220 / 100 / 50
Package (pcs)	4	5	3	1	1

Dimensions

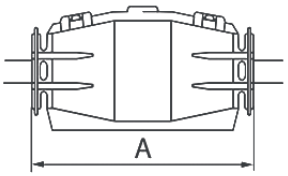

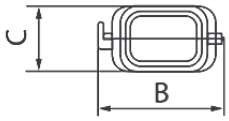

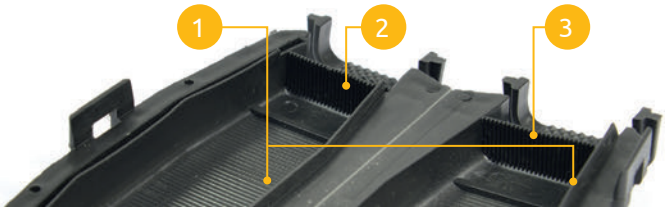

Components and characteristics

- Two polypropylene hinged shells with patented watertight system, made up of a longitudinal ribbing (1) functioning as the gel containing bulkhead. At both ends there are pre-fractured walls (2) that allow gel overflowing, ensuring a good water tightness.
- Wire slipping is avoided in longitudinal direction thanks to ribbing (3) at the ends of the shells and in transversal direction thanks to wire fixing with tie-wraps included in the package.
- Patented separator made up of two notched plates that allow a reciprocal jointing and two protrusions that block the plates.
- There are two holes at the ends of each model in order to insert and fix tie-wraps. Joint opening can occur only using a tool according to norm CEI 64-8.

Order code	Type	Connection type	Main (mm²)		Shunted (mm²)		Main (mm²)		Shunted (mm²)		Main (mm²)		Shunted (mm²)		Main (mm²)		Shunted (mm²)	
			Min.	Max.	Min.	Max.	Min.	Max.	Min.	Max.	Min.	Max.	Min.	Max.	Min.	Max.	Min.	Max.
MBG0025A24	Break 25	Main wiring	1,5	25	-	-	-	-	-	-	-	-	-	-	-	-	-	-
		Branching wiring	1,5	25	1,5	10	-	-	-	-	-	-	-	-	-	-	-	-
MBG0030A24	Break 30	Main wiring	1,5	50	-	-	1,5	10	-	-	1,5	4	-	-	1,5	2,5	-	-
		Branching wiring	1,5	50	1,5	35	-	-	-	-	-	-	-	-	-	-	-	-
MBG0050A24	Break 50	Main wiring	10	120	-	-	6	16	-	-	1,5	10	-	-	1,5	10	-	-
		Branching wiring	10	70	1,5	35	1,5	10	1,5	6	1,5	10	1,5	4	1,5	6	1,5	4
MBG0100A24	Break 100	Main wiring	35	185	-	-	16	50	-	-	4	25	-	-	6	25	-	-
		Branching wiring	25	150	10	120	10	35	6	25	4	16	2,5	4	6	16	2,5	10
MBG0050Y24	Break 50Y	Main wiring	-	-	-	-	-	-	-	-	-	-	-	-	-	-	-	-
		Branching wiring	6	70	2,5	50	1,5	25	1,5	16	2,5	16	1,5	10	2,5	16	1,5	10

Modular Terminal Blocks

Designed for fast, easy wiring with reliable double insulation.



Morek's **Modular Terminal Blocks** are designed for flexible and space-saving connections, ideal for use in compact installations, including resin and Gel Joints Break applications. Available in three single-pole models—MC 06, MC 16, and MC 35—these blocks support conductor sizes up to 6 mm², 16 mm², and 35 mm², respectively. With the ability to connect two to five poles, these blocks can be configured in various combinations, with three- and five-pole arrangements forming a unique pyramidal structure to optimize space utilization.

Morek's Modular Terminal Blocks offer a dependable, flexible solution for modular connections, balancing compact design with durability. With fast, easy installation and compliance with stringent safety standards, these blocks are the optimal choice for adaptable and space-efficient electrical connections in various applications.

Compliance with EN 60695-2-11, EN 60998-1:2004, EN 60998-2-1:2004, RoHS 2011/65/CE

Modular Configurations:

Assemble from two to five poles, with options for same-size or mixed-size sections to accommodate various requirements.

Space-Saving Pyramidal Design:

Three- and five-pole combinations create a compact pyramid structure, ideal for confined spaces.

High Durability and Insulation:

Made from self-extinguishing polycarbonate with brass conductive components, providing long-lasting and secure connections.

Re-enterable and Reusable:

Designed for easy re-entry and maintenance, particularly beneficial in reusable joint connections.

Ease of Installation:

Simple and quick wiring setup, supporting efficient installation and reliable double insulation.

Designed for fast, easy wiring with reliable double insulation, Morek's Modular Terminal Blocks offer high protection and flexibility for varied applications.

Operating Temperature: -20°C to +90°C
Rated Insulation Voltage: 500V
Current Ratings: 24A (MC 06), 41A (MC 16), 76A (MC 35)
Tightening Torque: 0.6 Nm (MC 06), 1.8 Nm (MC 16), 10 Nm (MC 35)
Material Composition: Self-extinguishing polycarbonate, brass, and zinc-plated steel





			MC 06	MC 16	MC 35
Order code			MAH0006A24	MAH0016A24	MAH0035A24
Technical data					
In-line connection	max. wire section (mm²)		6	16	35
Shunted connection	Feed through wire	min. section (mm²)	1,5	2,5	6
		max. section (mm²)	6	10	25
	Shunted wire	min. section (mm²)	1,5	2,5	6
		max. section (mm²)	1,5	4	10
Size (mm)	A		13,2	13,6	19,2
	B		3,6	5,8	9,3
	C		13,8	14,2	19,8
	D		28	31	40
Screw, hexagonal key			No. 1,5	No. 2	No. 4
Weight (g)			7	10	34
Package (pcs)			10	10	5

Maximum number of terminals recommended to use inside of gel joints Break.

	MC 06	MC 16	MC 35
Break 25	1	1	-
Break 30	3	3	2
Break 50	5	5	2
Break 50Y	5	5	3
Break 100	5	5	5

Dimensions

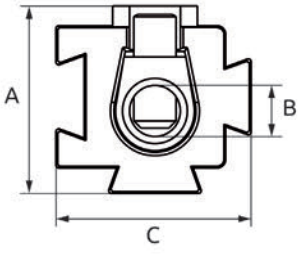

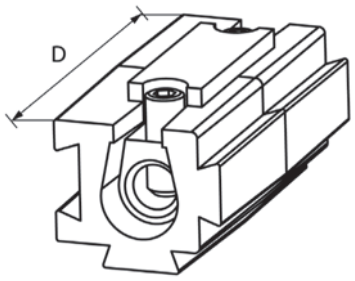

InsuGel One

Designed for secure filling and sealing of junction boxes, delivering high insulation and transparency in versatile installation settings.

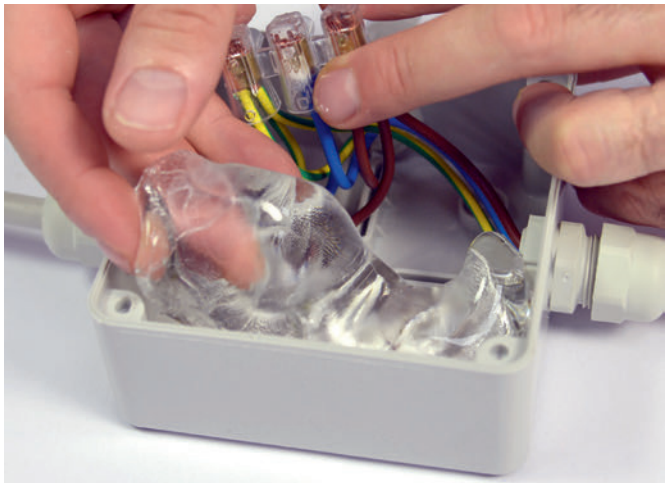

Morek's **InsuGel One** provides a flexible, ready-to-use insulation and protection solution, perfect for challenging installations. Available in 300 ml and 1 kg options, InsuGel One adapts to various applications—from confined spaces to filling junction boxes—offering high-performance sealing in both horizontal and vertical installations. This eco-friendly, non-toxic gel is re-enterable and reusable, making it ideal for installations requiring future adjustments.

The gel's auto-leveling properties ensure thorough coverage and adhesion, while its transparency allows easy inspection of connections. With high dielectric strength, temperature resistance, and IPX8 waterproof protection in suitable containers, InsuGel One guarantees durable, reliable performance for low-voltage applications, making it a practical choice for efficient and long-lasting insulation.

Ready to Use:
Immediate application without mixing or drying, ideal for fast, flexible installations.

Eco-Friendly and Non-Toxic:
Safe to handle, with no expiration date and no harmful effects on the environment..

Re-Enterable and Reusable:
Maintains flexibility, allowing easy re-entry for adjustments even after extended use.

Auto-Leveling and High Adherence:
Provides reliable, durable insulation that conforms to connection surfaces.

Transparent for Inspection:
Allows immediate visual checks, ensuring connection integrity.

Flexible Application:
Suitable for both confined spaces (300 ml) and junction box filling (1 kg), usable in horizontal and vertical positions.

High Insulation and Protection:
Delivers strong dielectric strength and IPX8 protection for waterproof applications.









InsuGel One, 300 ml

Order code	Description	PHS (pcs)
MBG0002G24	Insulation mono-component gel in cartridges 300g	1 / 24

The InsuGel One 300 ml cartridge provides a convenient, ready-to-use solution for insulation and protection in applications with limited space or difficult access. Designed for injection and auto-leveling, this transparent gel is ideal for flexible, re-enterable connections and allows precise dosing, reducing waste.



Technical specifications

- Operating temperature from -60 °C to 200 °C
- Dielectric strength > 23 kv/mm
- Thermal conductivity < 0,2 w/mk
- Dielectric constant < 5
- Volume resistivity > $2x10^{15}$ Ω x cm
- Autoignition temperature: > 400 °C

InsuGel One, 1 kg

Order code	Description	PHS (pcs)
MBG0001G24	Mono-component gel in paste form, re-enterable/reusable, 1kg package	1 / 12

The InsuGel One 1 kg solution is perfect for filling junction boxes. With high insulation resistance and no mixing required, it ensures optimal protection when all casing holes are sealed.



Technical specifications

- Linear shrinkage 23°C / 0%
- Penetration degree 23°C / 200 mm
- Hardness (Shore A) 23°C gel
- Self-extinguishing (compliant to norm CEI EN 60695-2)
- Protection degree IPX8 (compliant to norm CEI EN 60695) with waterproof container
- High insulation resistance up to 3500 V: compliant to norm EN 60439-1

MOREK

Creating a better future for You



Morek Q-Line – the tool-less innovated PV connections



40 A High performance

Rated input current at the highest levels in its category.

1500 V Top of range

Rated voltage at the highest level in the category: 1500 V.

IP 65/68 protection degree

Maximum protection degree of the category that resists both to continuous immersions and high-power water jets.

The new Morek "Q-LINE" connectors feature the innovative patented "TwinLock" technology, where the special construction of the spring clamp, thanks to the combination of two bladesallows you to:

- **Firmly lock the conductor of the solar cable**
- **Ensure exceptional current transmission thanks to the large contact surface**

All is certified by the prestigious TÜV SUD mark, to guarantee the maximum performance of the MOREK connectors.

In this way, the connection is fast, secure and avoids the frequent crimping errors that arise from repetitive movements in uncomfortable environments such as rooftops. 50% time saving compared to a standard crimp connection.

1500V 40A IP68 UV TÜV SÜD

morek.eu

The new Morek "Q-LINE" connectors feature the innovative patented "TwinLock" technology, where the special construction of the spring clamp, thanks to the combination of two bladesallows you to:

- **Firmly lock the conductor of the solar cable**
- **Exceptional current transmission thanks to the large contact surface.**

All is certified by the prestigious TÜV SUD mark, to guarantee the maximum performance of the MOREK connectors.
In this way, the connection is fast, secure and avoids the frequent crimping errors that arise from repetitive movements in uncomfortable environments such as rooftops. 50% time saving compared to a standard crimp connection.





Type	Male	Female
For conductor 4–6 mm² ●	MAP1006Q40	MAP2006Q40
Technical data		
Conductor cross-section (mm²)	4–6 mm²	
Rated input current (A)	40 A	
Rated voltage DC (V)	1500	
Rated impuls voltage (kV)	8	
Rated insulation voltage(kV)	10	
Pollution degree	3	
Temperature range (°C)	- 40 / +85	
Material of the electroconductive part	tinned copper	
Material of the insulating part	PPE + PS	
Flammability	UL 94 V- 0 standard, halogen free	
Width / Height / Length (mm)	20,8 / 20,8 / 64,2	20,8 / 20,8 / 61,8
Weight (g)	12,2	11,4
Package (pcs)	50 / 500	
Tested according standards	EN 62852:2015 + A1:2020	

Connection sequence



1.
Strip 20-22 mm using the end of the female connector as a reference.



2.
Insert the cable into the connector as far as it will go.



3.
Tighten the ring nut as far as it will go with the help of the tightening wrenches.

Regular connectors for PV applications are designed for long-term outdoor use and are compatible with MC-4 connections.

Advantages
- For conductors 4–10 mm²
- Rated voltage 1500 VDC
- Rated input current 40 A / 62 A
- Standard MC-4
- Protection class IP 68
- Easy disconnection without tools
- Versions for shield and panels






	Flying version		Panel version	
Type	Male	Female	Male	Female
For conductor 4–6 mm² ●	MAP1006B40	MAP2006B40	MAP1106B40	MAP2106B40
For conductor 10 mm² ●	MAP1010B40	MAP2010B40	MAP1110B40	MAP2110B40
Technical data				
Conductor cross-section Cu (mm²)	4–6 mm² / 10 mm²	4–6 mm² / 10 mm²	4–6 mm² / 10 mm²	4–6 mm² / 10 mm²
Rated input current (A)	40 A (4–6 mm²)/ 62 A (10 mm²)	40 A (4–6 mm²)/ 62 A (10 mm²)	40 A (4–6 mm²)/ 62 A (10 mm²)	40 A (4–6 mm²)/ 62 A (10 mm²)
Rated voltage DC (V)	1500	1500	1500	1500
Rated impuls voltage (kV)	8	8	8	8
Rated insulation voltage(kV)	10	10	10	10
Pollution degree	3	3	3	3
Temperature range (°C)	- 40 / +85	- 40 / +85	- 40 / +85	- 40 / +85
Material of the electroconductive part	tinned copper	tinned copper	tinned copper	tinned copper
Material of the insulating part	PPE + PS	PPE + PS	PPE + PS	PPE + PS
Flammability	UL 94 V- 0 standard, halogen free	UL 94 V- 0 standard, halogen free	UL 94 V- 0 standard, halogen free	UL 94 V- 0 standard, halogen free
Width / Height / Length (mm)	20 / 20 / 62	20 / 20 / 59	20 / 20 / 52	20 / 20 / 62
Weight (g)	10,5	9,8	7,5	6,7
Package (pcs)	50 / 300	50 / 300	50 / 300	50 / 300
Tested according standards	EN 62852:2015 + A1:2020	EN 62852:2015 + A1:2020	EN 62852:2015 + A1:2020	EN 62852:2015 + A1:2020

PV Accessories






	Assembly keys	Crimping plier for PV connectors		Edge clip for frame thick 1-3mm
		4–6 mm²	2,5–10 mm²	4,8x180 mm
Order code	MAP0000R40	MAP0001A40	MAP0003A40	MAP0002A40
Color design	Red	Red / blue	Green	Black
Package (pcs)	1 pair	1	1	30

Connector assembly instruction

Please referred to the assembly specification for cable dimension as shown in the following table before cable assembling, and please do not applying exceeded tightening torque for the connecting safety and performance issues.

- The cable must be 8 mm stripped.
- Insert the crimped contact without removing the gland ring.
- Applies to products:

MAP1006B40 MAP1010B40
MAP2006B40 MAP2010B40
MAP1106B40 MAP1110B40
MAP2106B40 MAP2110B40

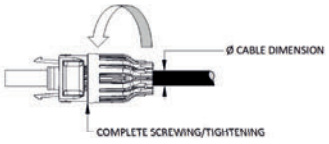

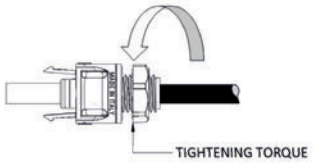

Assembling specification

Conductor cross-section (cable diameter)	Tightening torque (panel version)
4 mm² (max. 6,5 mm)	1,2–1,5 Nm
6 mm² (max. 7,0 mm)	1,2–1,5 Nm
10 mm² (max. 8,0 mm)	1,2–1,5 Nm

First numeral

Protection against ingress of solid foreign objects

IP	Requirements	Example	Meaning protection of persons against access to hazardous parts with:
0	No protection		No protection provided
1	Full penetration of 50,0 mm diameter sphere not allowed and shall have adequate clearance from hazardous parts. Contact with hazardous parts not permitted	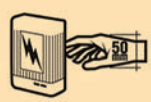	Back of hand
2	Full penetration of 12,5 mm diameter sphere not allowed. The jointed test finger shall have adequate clearance from hazardous parts	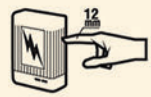	Finger
3	The access probe of 2,5 mm diameter shall not penetrate	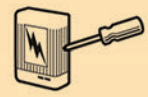	Tool
4	The access probe of 1,0 mm diameter shall not penetrate		Wire
5	Limited ingress of dust permitted (no harmful deposit, refer to standard)		Wire
6	Totally protected against ingress of dust		Wire

Second numeral

Protection against harmful ingress of water

IP	Requirements	Example	Meaning for protection from ingress of water:
0	No protection		No protection provided
1	Protected against vertically falling drops of water		Vertically dripping
2	Protected against vertically falling drops of water with enclosure tilted 15° from the vertical.	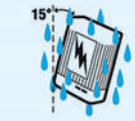	Enclosure tilted 15° from the vertical
3	Protected against sprays to 60° from the vertical		Limited spraying
4	Protected against water splashed from all directions		Splashing from all directions
5	Protected against low-pressure jets of water from all directions		Hosing jets from all directions
6	Protected against strong jets of water		Strong hosing jets from all directions
7	Protected against the effects of immersion between 15,0 cm and 1,0 m		Temporary immersion
8	Protected against longer periods of immersion under pressure		Immersion

Rating Example:



MOREK

Creating a better future for You



ev.morek.eu

End-to-End EV Charging Solutions with the Best Price-Quality-Support Ratio

Get access to exclusive EVC tools and insight

Gain access to best-in-class products with the market's best Price-Quality-Support ratio and unlock every opportunity in the EV market.



For residential and small commercial use



Perfect for company fleet and workplaces



For commercial buildings and public spaces



Solutions for large-scale installations up to 960 kW



All tools to create a end-to-end charging point.

- **Best Price-Quality-Support Ratio:**
  Affordable yet reliable solutions for every project.
- **Comprehensive Range:**
  Products tailored for various scales, from residential to commercial.
- **Technical Expertise:**
  Our support ensures smooth installations and operations.
- **Partner Network:**
  Access products easily through our trusted wholesalers.

CHARGE FORWARD MOREK

morek.eu

Morek Poland
+48 501 642 007
morekpl@morek.eu

Morek Czech Republic
+420 727 939 795
morek@morek.cz

Morek Portugal
+351 932 450 187
sales@morek.pt

Morek France
+33 7 81 38 34 46
morek@morek.fr

Morek Finland
+358 40 770 8030
myynti@morek.fi

Morek Estonia
+372 6 041 423
morek@morek.ee

Morek Latvia
+371 26 186 699
moreklv@morek.eu

Morek Lithuania
+370 67 382 192
info@morek.lt

Morek Slovakia
+421 918 159 385
morek@morek.sk

Morek Export
+420 727 835 176
export@morek.eu

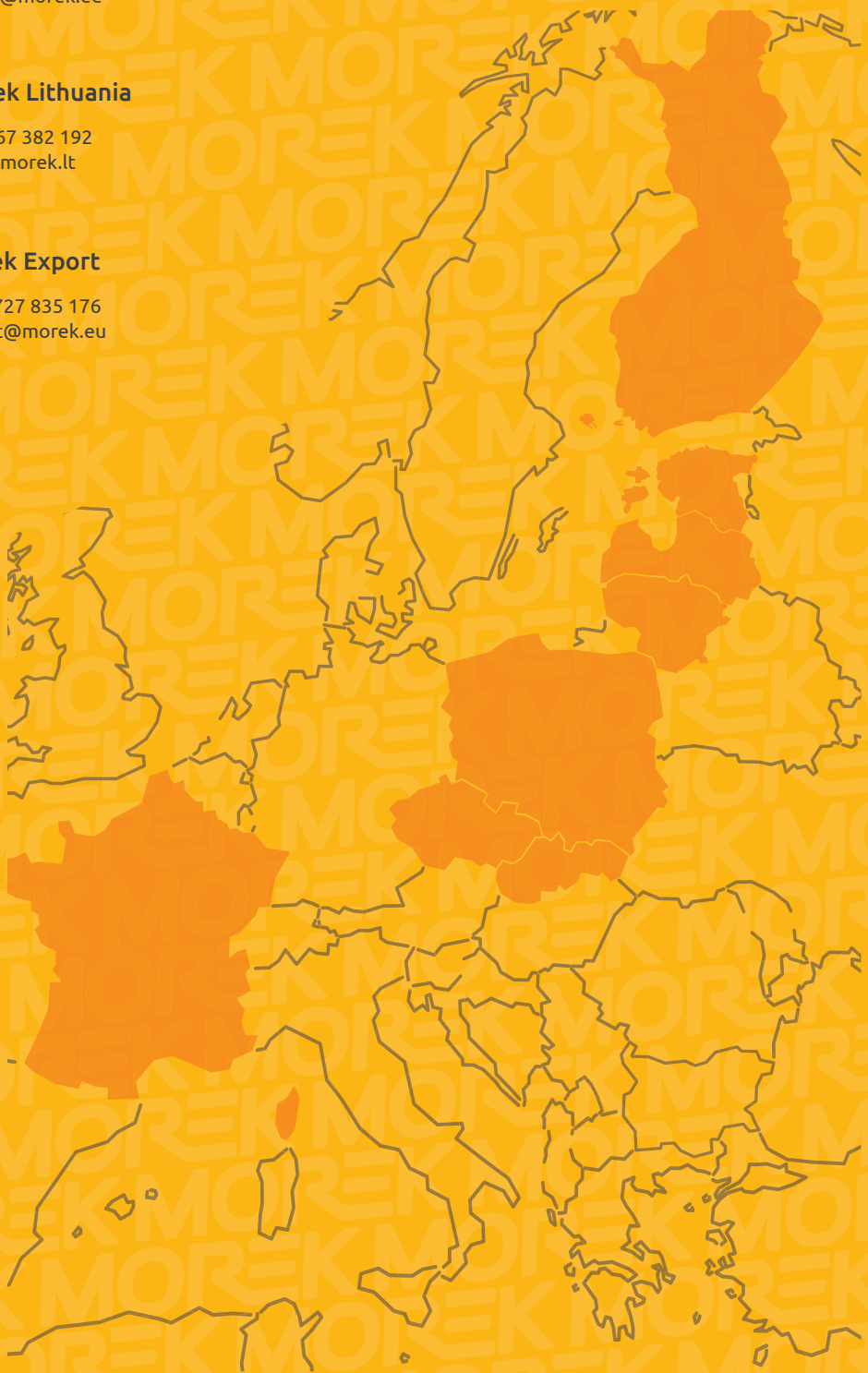

MOREK