MOREK

Creating a better future for You



Morek EV 2027 Charging Products

End-to-End EV Charging Products with the Best Price-Quality-Support Ratio



morek.eu

Enabling electrical connections through top-quality products and true partnerships.

Our mission, ***Enabling electrical connections through high-quality products and true partnerships***, underscores our dedication to providing the best price-quality-support ratio in the industry. As we lead the global electrification landscape, we remain committed to sustainable growth, balancing people, nature, and resources, and prioritizing the wellbeing of individuals, teams, and communities.

Morek **Finland**

Morek **Estonia**

Morek **Latvia**

Morek **Lithuania**

Morek **Poland**

Morek **Czech Republic**

Morek **Slovakia**

Morek **France**

Morek **Portugal**

With a presence across 9 European countries, we deliver high-quality EV charging solutions for B2B clients — including distributors, installers, and infrastructure partners — with a strong focus on strategic collaboration and long-term partnership.





End-to-End EV Charging Solutions with the Best Price-Quality-Support Ratio

Morek provides a full power range of EV charging solutions—built with the end-user in mind and developed to meet the needs of B2B professionals. Our goal is to support partners in offering seamless, scalable, and efficient EV charging systems, from home users to high-capacity commercial infrastructure.

We work closely with wholesalers, installers, and distributors to ensure fast delivery, reliable support, and long-term value.

Why Morek?

- Best Price-Quality-Support Ratio
- Full power-range from 7,4 kW to 480 kW
- Certified products for residential, business, and public charging
- Technical support and fast after-sales service



AC ONE-Series

Smart, reliable charging for residential, small commercial use, and apartment buildings

Pages 7-9



CORE-Series

Practical and compact AC and DC charging solutions for demanding users.

Pages 10-17



DC PRO-Series

Professional DC fast chargers from 30 kW to 480 kW, fully integrable with all major systems.

Pages 19-31



For installation

Complete set accessories and support for creating end-to-end charging points.

Pages 32-38



DLM

Morek's DLM system ensures balanced power distribution across multiple EV chargers.

Page 36



Foundation

Specifically engineered for the secure installation of Morek DC PRO chargers.

Page 33

Smart Protocol Compatibility

Morek chargers support the widely adopted OCPP 1.6J communication protocol, ensuring seamless integration with leading charging platforms. Depending on the series, models offer readiness for OCPP 2.0 transition, ISO 15118-2 Plug & Charge and VDV 261 compatibility, making the range a future-proof choice for evolving EV charging networks.

Premium Cabling

All our EV chargers are equipped with top brand charging cables, globally recognized for their durability, efficiency, and user-friendly design – ensuring a reliable charging experience every time.

Warranty

We stand behind the quality of our products. That's why we offer the option to extend the standard warranty period up to 5 years. This ensures long-term reliability and peace of mind for every installation.

Attestation of Conformity

Copies of all required certificates are available from Morek or your local Morek distributor upon request.

Photos and illustrations are for illustrative purposes only. Morek reserves the right to modify products and specifications without prior notice.

Morek AC ONE-Series *Charging 7,4 – 22 kW*

AC Charging for home and small-scale commercial use 7

ONE-Series AC chargers 8

Morek CORE-Series *Charging 22 – 60 kW*

Compact AC & DC Segment 10

2x22 kW Standalone AC Charger 11

22 kW Wall AC Chargers 12

30 kW DC Compact Fast Charger 14

40 kW DC Compact Fast Charger 15

60 kW DC Compact Fast Charger 16

60 kW DC Standalone Fast Charger 17

Morek DC PRO-Series *Charging 30 – 960 kW*

DC PRO Compact Chargers 19

30 kW DC PRO 20

60 kW DC PRO 21

120 to 180 kW DC PRO 22

240 to 320 kW DC PRO 24

400 kW DC PRO 26

480 kW DC PRO satellite solutions 28

Accessories for every EV installation

Cable Management System for DC PRO Chargers 32

Morek Concrete Foundations for DC PRO Chargers 33

Morek Charger Stands, including Accessories 34

Dynamic Load Management for AC and DC 36

Current Transformers and MID meters 38

Wiki – Morek Knowledge base and datasheets 39

MOREK

Creating a better future for You



Morek ONE-Series AC Chargers



The AC ONE-Series includes wall-mounted chargers with power up to 22 kW, supporting single- and three-phase installations. Designed for private homes, apartment buildings, and small business parking areas, the chargers support:

- **Dynamic Load Management (DLM)** to balance building capacity
- **OCPP connectivity** for backend system integration
- **Remote** monitoring and control
- **RFID** user authentication

Target Groups

- **Homeowners:** Convenient, compact, and easy-to-use charging at home.
- **Apartment Buildings:** Shared charging options for residents.
- **Small Businesses:** Charging for staff or customers in offices, gyms, or hospitality venues.
- **Long-Dwell Locations:** Hotels, schools, or workplaces where cars remain parked for extended periods.

Suitable for both standalone installations and networked charging environments, enabling scalable charging setups without overloading the electrical infrastructure.

Quick one-Man Installation:

Reduces time and cost, offering a practical solution for installers. Push-in terminals for fast setup and pre-configured settings for hassle-free commissioning.

User-Friendly UI:

Clear 3.8” LCD screen for real-time charging updates.

Flexible Power Options:

Available in 7,4 up to 22 kW versions to suit diverse charging requirements. Supports multiple use cases based on project needs, ideal for shared or public charging.

Connectivity:

Equipped with WiFi, LAN, RFID, and Bluetooth for flexible and remote access. Schedule automatic start/stop times with an app or use a custom management system.

Dynamic Load Management

Morek DLM enables charging even when available amperage is limited. Dynamic Load Management (DLM) allows use without upgrading grid capacity.

Cable or Socket Options:

Choose between a 6,5 m Phoenix Contact charging cable or socket-only versions for tailored installations.

Built-In Safety & Durability:

AC and DC leakage protection integrated. IP55 and IK08 certified for outdoor and indoor use.

ONE-Series AC Chargers

Versatile and reliable AC chargers for homes, apartments, workplaces, and small commercial setups. Available with cable or socket options, and suitable for wall or post mounting.

Built-In Protections:

Grid Overload Protection & Overcurrent Safety: Includes Dynamic Load Management (DLM) capability and internal overcurrent protection to prevent system overload. Integrated RCD and DC leakage protection ensure user safety without the need for additional components in the electrical cabinet.

Weather-Resistant:

Certified to IP55 and IK08 standards for water, dust, and impact resistance—suitable for both indoor and outdoor installations.



Morek AC Charger Stand for one or two chargers
Page 34







		7.4 kW Smart	11 kW Smart	22 kW Smart	22 kW Smart with 4G	22 kW Smart with socket	22 kW Smart with shutter	11 kW Plug&Go	22 kW Plug&Go
Order code		MEV07DREWN6T2	MEV11DREWN6T2	MEV22DREWN6T2	MEV22DREWG6T2	MEV22DREWNNT2	MEV22DREWNNT2S	MEV11NRNNN6T2	MEV22NRNNN6T2
Charging mode	Level 2, Mode 3	+	+	+	+	+	+	+	+
Connector type	6,5 m cable / Socket / Socket with Shutter	6,5 m cable	6,5 m cable	6,5 m cable	6,5 m cable	Socket without shutter	Socket with shutter	6,5 m cable	6,5 m cable
Charging control	Plug-and-Charge with start/stop touch button, RFID Card, BT APP, Web app, User APP	+	+	+	+	+	+	Plug-charge + RFID	
Contactless interoperability	International & Dual-Standard, 13.56 MHz	+	+	+	+	+	+	+	+
Internet connection	Ethernet LAN / Wi-Fi / 4G (optional)	+	+	+	+	+	+	-	-
External communication	RS485	+	+	+	+	+	+	+	+
IP protection	IP55	+	+	+	+	+	+	+	+
Impact strength	IK08	+	+	+	+	+	+	+	+
Display	LCD 3.8''	+	+	+	+	+	+	-	-
LED indicator	Ready / In use / Fault	-	-	-	-	-	-	+	+
Leakage protection	Type B (AC 30 mA + DC 6 mA)	+	+	+	+	+	+	+	+
Mounting	Wall / Stand	+	+	+	+	+	+	+	+
Stand / ground mount	Available, not included	+	+	+	+	+	+	+	+
Cooling method	Natural Cooling	+	+	+	+	+	+	+	+
Power network configuration	TN / TT -> (3P+N+PE), TN / TT -> (1P+N+PE)	+	+	+	+	+	+	+	+
Efficiency	≥97%	+	+	+	+	+	+	+	+
Power meter	OCPP integrated (accuracy 1,5%) / MID Meter compatibility	+	+	+	+	+	+	+	+
AC Voltage Input rating	3-phase 400V±20% / 1-phase 230V±20%	+	+	+	+	+	+	+	+
Standby consumption (Wh)	3	+	+	+	+	+	+	+	+
Feed-through terminal	Push-X-connection, Rated cross-section: 6 mm2, CS: 0.5 mm2 - 10 mm2; gray, blue, green-yellow	+	+	+	+	+	+	+	+
Rated frequency	50/60 Hz	+	+	+	+	+	+	+	+
Max Output current	Version dependent	32 A	16 A	32 A	32 A	32 A	32 A	16 A	32 A
Max Output power	Version dependent	7,4 kW	11 kW	22 kW	22 kW	22 kW	22 kW	11 kW	22 kW
DLM function	Available, CT-s not included	+	+	+	+	+	+	+	+
Storage temperature	-40 to 75°C ambient	+	+	+	+	+	+	+	+
Operating temperature	-30 to 50°C ambient	+	+	+	+	+	+	+	+
Operating humidity	Up to 95% non-condensing	+	+	+	+	+	+	+	+
Altitude	≤2000m	+	+	+	+	+	+	+	+
Electrical protection	Multi-Protection Circuitry: Over/Under Voltage, Temperature, Leakage, and Connection Safety PE ground protection	+	+	+	+	+	+	+	+
Dimensions gross, mm	455 (h) x260 (w) x150 (d)	+	+	+	+	+	+	+	+
Dimensions product without cable, mm	389 (h) x203 (w) x110 (d)	+	+	+	+	+	+	+	+
Weight gross, kg	3,3 ~ 6,3	4,5	4,6	6	6	2,5	2,5	6	6
Transport box size, mm	540 (h) x 480 (w) x 480 (d)	+	+	+	+	+	+	+	+
Transport box, qty	Version dependent	4 in 1 box	4 in 1 box	4 in 1 box	4 in 1 box	6 in 1 box	6 in 1 box	4 in 1 box	4 in 1 box
Pallet, qty	Version dependent	32 in 8 boxes	48 in 12 boxes	48 in 12 boxes	48 in 12 boxes	72 in 12 boxes	72 in 12 boxes	48 in 12 boxes	48 in 12 boxes

Morek CORE-Series
AC & DC Segment



Covers AC and DC Charging

The series combines AC chargers up to 2 × 22 kW and compact DC chargers from 30 kW to 60 kW.

ISO 15118 compatibility

Enables Plug & Charge functionality for automatic vehicle authentication and seamless charging without RFID or apps.

Compact and Practical Installation

Designed for locations where charging infrastructure must fit efficiently into existing parking areas and electrical systems.

Simultaneous Charging

Dual-outlet AC charging posts allow two vehicles to charge at the same time.

Smart Power Management

Dynamic Load Management distributes available electrical capacity between multiple charging units.

Connected and Controlled Charging

OCPP connectivity, RFID authentication, ISO 15118 communication, and MID-certified metering support professional charging operation and billing.

Charging solutions for commercial sites, mixed-use buildings, and semi-public locations.

The Morek CORE Series combines practical AC and DC charging in a single product line — built for locations where space, electrical capacity, and daily uptime dictate the setup.

The AC range includes wallbox chargers up to 22 kW and dual-outlet charging posts up to 2 × 22 kW, enabling simultaneous charging of multiple vehicles in workplace and parking environments.

For faster turnaround, the series includes compact DC chargers from 30 kW to 60 kW — enough speed for fleet vehicles and visitor parking without the footprint or cost of full high-power DC infrastructure.

All CORE chargers come with Dynamic Load Management (DLM) ready (controller and CTs sold separately) for multi-point installations, OCPP connectivity for backend and payment systems, RFID authentication, and MID-certified energy metering for billing-grade accuracy.

The CORE Series fits workplaces, retail parking, logistics yards, and fleet depots — anywhere AC and compact DC charging need to work together within tight space and limited grid capacity.

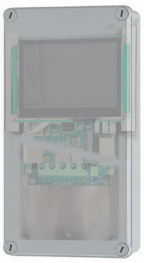

DLM available for CORE-Series
Page 37

CORE-Series 2x22 kW Standalone Charger

Focused on essential functionality, safety, and durability, the CORE-Series 2×22 kW pedestal charger delivers a cost-effective and scalable AC charging solution for locations requiring reliable multi-user charging without unnecessary complexity or high power upgrade.



	Socket	Shutter socket
Order code	MEVC44DREWGNT2NF	MEVC44DREWGNT2SF
Charging mode	Level 2, Mode 3	
Connector type	2x Type 2 sockets	2x Type 2 socket with shutter
Charging control	Plug-and-Charge with start/stop touch button, RFID Card, Web client, User APP	
Internet connection	LAN, Wi-Fi and 4G	
External communication	RS485	
IP protection	IP54	
Impact strength	IK10	
Display	HMI: 7” touch screen	
LED indicator	Yes	
Communication protocol	OCPP1.6 J / OCPP2.0 Upgradeable	
Mounting	Ground	
Cooling method	Natural Cooling	
Power network configuration	TN / TT	
Efficiency	≥97%	
Power meter	2x MID Meters	
AC power Input rating	3-phase 400V±20% / 1-phase 230V±20%	
Standby consumption (Wh)	<5 W	
Rated frequency	50/60 Hz	
Output current	63 A	
Output power	2 x 22 kW	
DLM function	Available, not included. Max count 20 chargers	
Storage temperature	-40 to 70°C ambient	
Operating temperature	-30 to 50°C ambient	
Operating humidity	5%~95% RH, Non-condensing	
Altitude	≤ 2000m, No Derating	
Electrical protection	OVP(Over Voltage Protection), OCP(Over Current Protection), OTP(Over Temperature Protection), UVP(Under Voltage Protection), SPD(Surge Protection Detection), Grounding Protection, SCP(Short Circuit Protection), Control Pilot Fault, Relay Welding Detection, RCD(DC 6mA)	
Dimensions gross, mm	1405(h) x450(w) x250(d)	

Key Benefits:

- Dual 22 kW outputs. Charge two electric vehicles simultaneously.
- Standalone operation. No backend required for simple and cost-effective deployment.
- Smart load management ready. Supports efficient power distribution and future scalability.
- Built for public and commercial use. Robust enclosure with reliable performance in demanding environments.

CORE-Series 22 kW Wall Charger

Compact and lightweight EV charger designed for homes, apartment buildings, and workplaces. Ideal for single charging points where reliable daily charging and smart access control are required.



Socket version



Cable version

Key Benefits:

- Compact Design. Small and lightweight charger suitable for wall installation in residential and workplace environments.
- Fast AC Charging. Up to 22 kW charging power enables efficient daily charging for most EVs.
- Smart Connectivity. OCPP compatibility allows integration with backend platforms for monitoring and payment systems.
- Controlled Access. RFID authentication enables secure charging and user access management.
- Energy Monitoring. MID-certified energy metering supports accurate consumption tracking and billing.





	Straight cable	Spiral cable	Socket	Shutter socket
Order code	MEVC22DREWG6T2P	MEVC22DREWG5T2C	MEVC22DREWGNT2N	MEVC22DREWGNT2S
Charging mode	Level 2, Mode 3			
Connector type	Type 2 connector with 6,5 m cable	Type 2 connector with 5 m cable	Type 2 socket	Type 2 socket with shutter
Charging control	Plug-and-Charge with start/stop touch button, RFID Card, Web client, User APP			
Contactless interoperability	ISO/IEC 14443 A/B (13.56 MHz), incl. MIFARE			
Internet connection	LAN, Wi-Fi and 4G			
External com.	RS485			
IP protection	IP65		IP55	
Impact strength	IK10			
Display	HMI: 7” touch screen			
LED indicator	Yes			
Communication	OCPP1.6 J / OCPP2.0 Upgradeable			
Leakage protection	Type B (AC 30mA + DC 6mA)			
Mounting	Wall / Stand			
Cooling method	Natural Cooling			
Power network conf.	TN / TT			
Peak efficiency	≥97%			
Power meter	MID Meter			
AC power Input rating	3-phase 400V±20% / 1-phase 230V±20%			
Standby Power	<5W			
Rated frequency	50/60 Hz			
Input current (AC)	32 A			
Output power	22 kW			
DLM function	Available, not included. DLM max count 20			
Storage tem.	-40 to 70°C ambient			
Op.temperature	-30 to 50°C ambient			
Op. humidity	5%~95% RH, Non-condensing			
Altitude	≤ 2000m, No Derating			
Electrical protection	OVP(Over Voltage Protection), OCP(Over Current Protection), OTP(Over Temperature Protection), UVP(Under Voltage Protection), SPD(Surge Protection Detection), Grounding Protection, SCP(Short Circuit Protection), Control Pilot Fault, Relay Welding Detection, RCD(DC 6mA)			
Dimensions, mm	495(h) x366(w) x136(d)			

CORE-Series 2x22 kW Wall Charger

Dual-outlet EV charger designed for apartment buildings, workplaces, and shared parking areas. Allows two vehicles to charge simultaneously while supporting controlled access and smart charging management.



Socket version



Cable version

Key Benefits:

- Dual Charging Capability. Two charging outlets allow simultaneous charging of two vehicles from one unit.
- Efficient Use of Space. One charger can serve multiple users in apartment buildings, workplaces, and shared parking areas.
- Smart Load Management. Dynamic Load Management distributes available electrical capacity between charging sessions.
- Connected Charging System. OCPP connectivity enables remote monitoring, management, and integration with payment platforms.





	Straight cable	Spiral cable	Socket	Shutter socket
Order code	MEVC44DREWG6T2P	MEVC44DREWG5T2C	MEVC44DREWGNT2N	MEVC44DREWGNT2S
Charging mode	Level 2, Mode 3			
Connector type	2x Type 2 connector with 6,5 m cable	2x Type 2 connector with 5 m cable	2x Type 2 socket	2x Type 2 socket with shutter
Charging control	Plug-and-Charge with start/stop touch button, RFID Card, Web client, User APP			
Contactless interoperability	ISO/IEC 14443 A/B (13.56 MHz), incl. MIFARE			
Internet connection	LAN, Wi-Fi and 4G			
External com.	RS485			
IP protection	IP65		IP55	
Impact strength	IK10			
Display	HMI: 7” touch screen			
LED indicator	Yes			
Communication	OCPP1.6 J / OCPP2.0 Upgradeable			
Leakage protection	Type B (AC 30mA + DC 6mA)			
Mounting	Wall / Stand			
Cooling method	Natural Cooling			
Power network conf.	TN / TT			
Peak efficiency	≥97%			
Power meter	MID Meter			
AC power Input rating	3-phase 400V±20% / 1-phase 230V±20%			
Standby Power	<5W			
Rated frequency	50/60 Hz			
Input current (AC)	63 A			
Output power	2x 22 kW			
DLM function	Available, not included. DLM max count 20			
Storage tem.	-40 to 70°C ambient			
Op.temperature	.-30 to 50°C ambient			
Op. humidity	5%~95% RH, Non-condensing			
Altitude	≤ 2000m, No Derating			
Electrical protection	OVP(Over Voltage Protection), OCP(Over Current Protection), OTP(Over Temperature Protection), UVP(Under Voltage Protection), SPD(Surge Protection Detection), Grounding Protection, SCP(Short Circuit Protection), Control Pilot Fault, Relay Welding Detection, RCD(DC 6mA)			
Dimensions, mm	530(h) x407(w) x166(d)			

CORE-Series 30 kW DC Compact Fast Charger

The Morek DC Core-Series 30 kW Charger is a safe, reliable, and efficient DC charging solution designed for everyday commercial and semi-public charging applications.



Key Benefits:

- 30 kW DC fast charging power
- CCS2 connector with 5 m Phoenix Contact charging cable
- 7” touchscreen HMI for real-time charging information
- Multiple charging start options: RFID, app, QR code, manual
- Wi-Fi, LAN and 4G connectivity
- Robust steel enclosure for indoor and outdoor installations

Order code	MEV30DRENG5CCSP
Charging mode	Level 3, Mode 4
Connector type	CCS2 connector with 5m cable
Number of connectors	1
Charging control	RFID Card, Web app, User APP, QR code, manual
Contactless interoperability	ISO/IEC 14443 A/B (13.56 MHz), incl. MIFARE
Internet connection	LAN, Wi-Fi, 4G
External communication	RS485
IP protection	IP54
Impact strength	IK10
Display	HMI: 7” touch screen
LED indicator	Yes
Communication protocol	OCPP1.6 J / OCPP2.0 Upgradeable
Power Distribution	No
Casing material	Galvanized and painted steel
Cooling method	Smart air cooling
Power network configuration	TN / TT
Peak efficiency	≥97%
Noise level	< 55dB
Power meter	Yes
Mounting	Wall- or stand mounted
Standby Power	<5W
Input voltage (AC)	3-phase 400V±20%
Suggested min AC cable line	At least 5*16 mm² (Cu) or 5*25 mm² (Al)
Input current (AC)	51 A
Output power	30 kW (max)
DLM function	Available
DLM max count	11
DC output voltage range	150 - 1000 VDC (constant power range 300 - 1000 VDC)
DC output current	100 A / connector
Storage temperature	-40 to 70°C ambient
Operating temperature	-30 to 50°C ambient
Operating humidity	5%~95% RH, Non-condensing
Grid frequency	50/60 Hz
Altitude	≤ 2000m, No Derating
Electrical protection	OVP(Over Voltage Protection), OCP(Over Current Protection), OTP(Over Temperature Protection), UVP(Under Voltage Protection), SPD(Surge Protection Detection), Grounding Protection, SCP(Short Circuit Protection), Control Pilot Fault, Relay Welding Detection, RCD(DC 6mA)
Dimensions mm	640(h)x410(w)x210(d)
Weight, kg	58

CORE-Series 40 kW DC Compact Fast Charger

The Morek DC Core-Series 40 kW Charger is a high-performance, safe, and reliable DC fast charging solution designed for demanding commercial and semi-public environments.



Order code	MEV40DRENG5CCSP
Charging mode	Level 3, Mode 4
Connector type	CCS2 connectors with 5m cable
Number of connectors	2
Charging control	RFID Card, Web app, User APP, QR code, manual
Contactless interoperability	ISO/IEC 14443 A/B (13.56 MHz), incl. MIFARE
Internet connection	LAN, Wi-Fi, 4G
External communication	RS485
IP protection	IP54
Impact strength	IK10
Display	HMI: 7" touch screen
LED indicator	Yes
Communication protocol	OCPP1.6 J / OCPP2.0 Upgradeable
Power Distribution	Yes
Casing material	Galvanized and painted steel
Cooling method	Smart air cooling
Power network configuration	TN / TT
Peak efficiency	≥97%
Noise level	< 55dB
Power meter	Yes
Mounting	Wall- or stand mounted
Standby Power	<5W
Input voltage (AC)	3-phase 400V±20%
Suggested min AC cable line	At least 5*25 mm² (Cu) or 5*35 mm² (Al)
Input current (AC)	68 A
Output power	40 kW (max)
DLM function	Available
DLM max count	11
DC output voltage range	150 - 1000 VDC (constant power range 300 - 1000 VDC)
DC output current	125 A / connector
Storage temperature	-40 to 70°C ambient
Operating temperature	-30 to 50°C ambient
Operating humidity	5%~95% RH, Non-condensing
Grid frequency	50/60 Hz
Altitude	≤ 2000m, No Derating
Electrical protection	OVP(Over Voltage Protection), OCP(Over Current Protection), OTP(Over Temperature Protection), UVP(Under Voltage Protection), SPD(Surge Protection Detection), Grounding Protection, SCP(Short Circuit Protection), Control Pilot Fault, Relay Welding Detection, RCD(DC 6mA)
Dimensions mm	830(h)x570(w)x485(d)
Weight, kg	135

Key Benefits:

- Up to 40 kW DC fast charging power
- Two CCS2 connectors with 5 m Phoenix Contact charging cables
- 7" touchscreen HMI with real-time charging information
- Multiple charging start options: RFID, app, QR code, manual
- Wi-Fi, LAN and 4G connectivity
- Integrated power distribution for dual charging
- Robust galvanized steel enclosure for indoor and outdoor use

CORE-Series 60 kW DC Compact Fast Charger

The Morek DC Core-Series 60 kW Charger is a high-performance, safe, and reliable DC fast charging solution designed for demanding commercial and semi-public environments.



Key Benefits:

- Flexible Installation. Wall or stand mounting allows the charger to be installed in locations where space is limited or infrastructure requirements vary.
- Compact Footprint. High charging performance in a space-saving design, ideal for workplaces, commercial sites and fleet depots.
- Dual Charging Capability. Two CCS2 connectors enable simultaneous charging of two electric vehicles with intelligent power distribution.
- Smart Connectivity. OCPP support together with LAN, Wi-Fi and 4G enables remote monitoring, software updates and backend integration.

Order code	MEV60DRENG5CCSP
Charging mode	Level 3, Mode 4
Connector type	CCS2 connectors with 5m cable
Number of connectors	2
Charging control	RFID Card, Web app, User APP, QR code, manual
Contactless interoperability	ISO/IEC 14443 A/B (13.56 MHz), incl. MIFARE
Internet connection	LAN, Wi-Fi, 4G
External communication	RS485
IP protection	IP54
Impact strength	IK10
Display	HMI: 7” touch screen
LED indicator	Yes
Communication protocol	OCPP1.6 J / OCPP2.0 Upgradeable
Power Distribution	Yes
Casing material	Galvanized and painted steel
Cooling method	Smart air cooling
Power network configuration	TN / TT
Peak efficiency	≥97%
Noise level	< 55dB
Power meter	Yes
Mounting	Wall- or stand mounted
Standby Power	<5W
Input voltage (AC)	3-phase 400V±20%
Suggested min AC cable line	At least 5*50 mm² (Cu) or 5*70 mm² (Al)
Input current (AC)	102 A
Output power	60 kW (max)
DLM function	Available
DLM max count	11
DC output voltage range	150 - 1000 VDC (constant power range 300 - 1000 VDC)
DC output current	200 A / connector
Storage temperature	-40 to 70°C ambient
Operating temperature	-30 to 50°C ambient
Operating humidity	5%~95% RH, Non-condensing
Grid frequency	50/60 Hz
Altitude	≤ 2000m, No Derating
Electrical protection	OVP(Over Voltage Protection), OCP(Over Current Protection), OTP(Over Temperature Protection), UVP(Under Voltage Protection), SPD(Surge Protection Detection), Grounding Protection, SCP(Short Circuit Protection), Control Pilot Fault, Relay Welding Detection, RCD(DC 6mA)
Dimensions mm	900(h)x650(w)x260(d)
Weight, kg	150

CORE-Series 60 kW Standalone Fast Charger

DC 60 kW Fast Charger – Dual Vehicle Charging Capability.
Powerful and efficient charging, allowing two vehicles to charge approx.
200 km of range per hour each or a single vehicle at twice the speed.



Cable management system available, not included

Key Benefits:

- Designed for Public Charging. Freestanding construction makes the charger suitable for public, retail and roadside charging locations.
- Intuitive User Experience. Large 10” touchscreen provides clear charging information and a simple user interface.
- Dual Charging Capability. Two CCS2 connectors allow two vehicles to charge simultaneously with dynamic power sharing.
- Connected Charging System. OCPP support together with LAN, Wi-Fi and 4G enables remote monitoring, management and integration with payment platforms.

Order code	MEVC60DRENG5CCSPF
Charging mode	Level 3, Mode 4
Connector type	CCS2 connectors with 5m cable
Number of connectors	2
Charging control	RFID Card, Web app, User APP, QR code, manual
Contactless interoperability	ISO/IEC 14443 A/B (13.56 MHz), incl. MIFARE
Internet connection	LAN, Wi-Fi, 4G
External communication	RS485
IP protection	IP54
Impact strength	IK10
Display	HMI: 10” touch screen
LED indicator	Yes
Communication protocol	OCPP1.6 J / OCPP2.0 Upgradeable
Power Distribution	Yes
Casing material	Galvanized and painted steel
Cooling method	Smart air cooling
Power network configuration	TN / TT
Peak efficiency	≥97%
Noise level	< 55dB
Power meter	Yes
Mounting	Floor mounted
Standby Power	<5W
Input voltage (AC)	3-phase 400V±20%
Suggested min AC cable line	At least 5*50 mm² (Cu) or 5*70 mm² (Al)
Input current (AC)	102 A
Output power	60 kW (max)
DLM function	Available
DLM max count	11
DC output voltage range	150 - 1000 VDC (constant power range 300 - 1000 VDC)
DC output current	200 A / connector
Storage temperature	-40 to 70°C ambient
Operating temperature	-30 to 50°C ambient
Operating humidity	5%~95% RH, Non-condensing
Grid frequency	50/60 Hz
Altitude	≤ 2000m, No Derating
Electrical protection	OVP(Over Voltage Protection), OCP(Over Current Protection), OTP(Over Temperature Protection), UVP(Under Voltage Protection), SPD(Surge Protection Detection), Grounding Protection, SCP(Short Circuit Protection), Control Pilot Fault, Relay Welding Detection, RCD(DC 6mA)
Dimensions mm	2100(h)x1100(w)x800(d)
Weight, kg	302

MOREK

Creating a better future for You



Morek DC PRO-Series Compact Chargers



ISO 15118-2 VDV261 compatibility

Enables Plug & Charge functionality for automatic vehicle authentication and seamless charging without RFID or apps.

Dual Charging Capability

DC PRO models can charge two vehicles simultaneously.

Scalability

Solutions that grow with your business.

Smart Load Management

Built-in Load Balancing monitors and distributes the power between the EVs.

Flexible Installation

Options for wall-mounting or post/foundation setups.

The DC PRO-Series includes fast chargers from 30 kW up to 480 kW, designed for continuous operation in demanding environments such as public charging stations, highway service areas, logistics hubs, and commercial fleet depots.



- Dynamic Load Management (DLM) to balance building capacity
- OCPP connectivity for backend system integration
- Remote monitoring and control
- RFID user authentication
- MID-certified energy metering

Target Groups

- Company Fleets: Fast charging to minimize downtime and keep operations running smoothly.
- Workplaces & Offices: Convenient charging for employees and service vehicles.
- Commercial Environments: Ideal for courier services, logistics bases, and maintenance fleets.

Suitable for installations where charging speed, system integration, and operational uptime are critical.

A scalable DC charging platform built for high utilization, system integration, and long-term infrastructure deployment

Morek DC PRO 30 kW

Morek 30 kW Fast Charger – Efficient Charging for Businesses. Discover our certified 30 kW EV chargers, tailored to meet the specific needs of company fleets, workplaces, and medium-sized commercial operations.



Standard – wall mounted



Pole mounted DC POLE
MEV002N9003STD
Page 35

Target Groups:

- Company Fleets: Reliable charging for operational vehicles.
- Workplaces: Perfect for employee parking areas and small offices.

Key Benefits:

- Faster Charging: Reduces downtime for higher efficiency.
- Scalability: Easily expandable as charging needs grow.
- Cost-Effective: Tailored for medium-sized installations.

	DC PRO 30 kW
Order code	MEV30DRENG5CCS
Charging mode	Level 3, Mode 4
Connector type	CCS2
Charging control	APP, QR Code (optional), RFID
Contactless interoperability	Supporting international & dual standards, Mifare 13.56 MHz and others.
Internet connection	4G / Ethernet LAN
IP protection	IP54
Impact strength	IK10
Display	LCD 7'' touchscreen
Communication protocol	OCPP1.6 J / OCPP2.0 Upgradeable
Power distribution	No
Casing material	Galvanized steel
Cooling method	Forced Air Cooling
Power network configuration	TN-S / TN-C-S / TT
Peak efficiency	≥97%
Noise level	≤60 dB
Power meter	DC MID
Mounting	Wall / Pole
Standby consumption (Wh)	≤ 99 W
Input current	48 A (0~58 A)
Output power	30 kW
DC output voltage range	DC 150~1000 V
DC output current	0~100 A
Power Limiting	Available
AC power Input rating	400 VAC (323~437 VAC)
Suggested min AC cable line	At least 5*16 mm² (Cu) or 5*25 mm² (Al)
Storage temperature	-40 to 70°C
Operating temperature	-25 to 50°C
Operating humidity	5%~95% (no condensation)
Grid frequency	50/60 Hz
DLM function	Available, not included
Altitude	≤2000m
Electrical protection	Input Over- and Low Voltage, Output Over-Voltage and Current, Short-Circuit
Dimensions gross, mm	750 (h) x 600 (w) x 260 (d)
Weight, kg	71

Morek DC PRO 60 kW

DC 60 kW Fast Charger – Dual Vehicle Charging Capability.
Powerful and efficient charging, allowing two vehicles to charge approx. 200 km of range per hour each or a single vehicle at twice the speed.



Key Benefits:

- Connectivity: LAN, 4G, and RFID for flexible access control.
- Card Payment Terminal Capability: Optional add-on for public installations.
- Foundation-Mounted: Requires a stable foundation for outdoor or public use.
- Dynamic Load Management (DLM): Optimizes energy usage and prevents grid overload.
- Scalable Solution: Easily expands to meet growing charging demands.
- Public & Private Charging Modes: Customizable settings for controlled or open access.

	DC PRO 60 kW
Order code	MEV60DRENG5CCS
Charging mode	Level 3, Mode 4
Connector type	CCS2 * 2
Charging control	APP, QR Code (optional), RFID
Contactless interoperability	Supporting international & dual standards, Mifare 13.56 MHz and others.
Internet connection	4G / Ethernet
IP protection	IP54
Impact strength	IK10
Display	LCD 7'' touchscreen
Communication protocol	OCPP1.6 J / OCPP2.0 Upgradeable
Power distribution	Dynamic between 2 plugs
Casing material	Galvanized steel
Cooling method	Forced Air Cooling
Power network configuration	TN-S / TN-C-S / TT
Peak efficiency	≥97%
Noise level	≤60 dB
Power meter	DC MID
Mounting	Ground
Standby consumption (Wh)	≤ 99 W
Input current	0~114 A
Output power	60 kW
DC output voltage range	150~1000 V
DC output current	0~200 A
Power Limiting	Available
AC power Input rating	400 VAC (323~437 VAC)
Suggested min AC cable line	At least 4*50 mm² (Cu) or 4*70 mm² (Al)
Storage temperature	-40 to 70°C
Operating temperature	-25 to 50°C
Operating humidity	5%~95% (no condensation)
Grid frequency	50/60 Hz
DLM function	Available, not included
Altitude	≤2000m
Electrical protection	Input Over- and Low Voltage, Output Over-Voltage and Current, Short-Circuit
Dimensions gross, mm	1550 (h) x 700 (w) x 400 (d)
Weight, kg	190

Morek DC PRO 120 to 180 kW

Built with a robust galvanized steel enclosure, IP54 ingress protection and IK10 impact resistance, and featuring forced air cooling with low noise levels.



Key Benefits:

- Up to 180 kW DC fast charging power
- Two CCS2 connectors with 5 m Phoenix Contact charging cables
- 10” LCD touchscreen with real-time charging information
- Multiple charging control options: APP, optional QR code, RFID
- Ethernet and 4G connectivity with OCPP 1.6J support
- Dynamic power distribution between connectors
- IP54 protection and IK10 impact resistance

Robust galvanized steel enclosure for indoor and outdoor use



Cable management system available, not included

Page 33

Order code		120 kW	180 kW
Charging mode	Level 3, Mode 4	+	+
Connector type	5 m cable CCS2 * 2	+	+
Charging control	APP, QR Code (optional), RFID	+	+
Contactless interoperability	Supporting international & dual standards, Mifare 13.56 MHz and others.	+	+
Internet connection	4G / Ethernet	+	+
IP protection	IP54	+	+
Impact strength	IK10	+	+
Display	LCD 10’’ touchscreen	+	+
Communication protocol	OCPP1.6 J / OCPP2.0 Upgradeable	+	+
Power distribution	Dynamic between 2 plugs	+	+
Casing material	Galvanized steel	+	+
Cooling method	Forced Air Cooling	+	+
Power network configuration	TN-S / TN-C-S / TT	+	+
Peak efficiency	≥97%	+	+
Noise level	≤60 dB	+	+
Power meter	DC MID	+	+
Mounting	Ground	+	+
Standby consumption (Wh)	≤ 99 W	+	+
Input current	0~342 A (0~228 A)	+	+
Output power	180 kW (120 kW)	+	+
DC output voltage range	150~1000 V	+	+
(Max) DC output current	Version dependent	0~300 A	0~375 A
Power Limiting	Version dependent	120 kW	180 kW
AC voltage Input rating	400 VAC (323~437 VAC)	+	+
Suggested min AC cable line	At least 4*240 (4*150) mm² (Cu) or 4*400 (4*240) mm² (Al)	+	+
Storage temperature	-40 to 70°C	+	+
Operating temperature	-30 to 50°C (display -25 to 50°C)	+	+
Operating humidity	5%~95% (no condensation)	+	+
Grid frequency	50/60 Hz	+	+
DLM function	Available, not included	+	+
Altitude	≤2000m	+	+
Electrical protection	Input Over- and Low Voltage, Output Over-Voltage and Current, Short-Circuit, Leakage	+	+
Dimensions gross, mm	1700 (h) x 800 (w) x 600 (d)	+	+
Weight, kg	Version dependent	310	355



Morek DC PRO 240 to 320 kW

The Morek DC PRO-series charger is a high-performance DC charging solution designed for heavy commercial vehicles and demanding fleet applications.



Key Benefits:

- Up to 320 kW DC charging power
- Two CCS2 connectors with 5 m charging cables
- Optional 22 kW Type 2 AC socket with shutter
- 10.1” touchscreen with real-time charging information
- Multiple charging start options: RFID, app, QR code, Autocharge, manual
- LAN, 4G and Wi-Fi connectivity
- Dynamic power distribution between connectors
- Robust galvanized steel enclosure for indoor and outdoor use



DLM available for DC PRO Series

Page 37

		240 kW	320 kW
Order code		MEV240DRENG5CCS	MEV320DRENG5CCS
Charging mode	Level 3, Mode 4	+	+
Connector type	2 x CCS2 and Type 2 socket with shutter (optional)	+	+
Charging control	OCPP, Autocharge, button/password, RFID Card, Web APP, QR code	+	+
Contactless interoperability	Supporting international & dual standards, Mifare 13.56 MHz and others.	+	+
Internet connection	4G / Ethernet LAN / Wi-Fi	+	+
IP protection	IP54	+	+
Impact strength	IK10	+	+
Display	LCD 10.1’’ touchscreen	+	+
Communication protocol	OCPP1.6 J / OCPP2.0 Upgradeable	+	+
Power distribution	Dynamic, between 2 connectors	+	+
Maximum current per DC outlet	350 A (400 A in Boost Mode)	+	+
Casing material	Galvanized steel	+	+
Cooling method	Forced Air Cooling	+	+
Power network configuration	TN-S / TN-C-S / TT	+	+
Peak efficiency	≥97%	+	+
Noise level	≤60 dB	+	+
Power meter	Yes, DC	+	+
Standby consumtion (Wh)	≤100 W	+	+
Input current		0 ~ 394 A	0 ~ 525 A
Output power	320 kW (240 kW)	240	320
DC output voltage range	150 ~ 1000 V	0~300 A	0~375 A
DC output current	0 ~ 375 A (0 ~ 250 A)	240 kW	320 kW
AC power Input rating	AC 400V ±10%	+	+
Suggested min AC cable line	At least 4*500 (4*300) mm² (Cu) or 4*630 (4*400) mm² (Al)	+	+
Storage temperature	-40 to 70°C	+	+
Operating temperature	-25 to 50°C	+	+
Operating humidity	5%~95% (no condensation)	+	+
Grid frequency	50/60 Hz	+	+
DLM function	Available, not included	+	+
Altitude	≤2000m	+	+
Electrical protection	Multi-Protection Circuitry: Over/Under Voltage, Temperature, Leakage, and Connection Safety PE ground protection	+	+
Dimensions, product without cable, mm	2190 (h) x 900 (w) x 750 (d)	+	+
Weight, kg	Version dependent	457	525



Morek DC PRO 400 kW

Ultra-quiet forced air cooling, the DC PRO 400 kW charger is ideal for fleet depots, logistics hubs, highway rest areas, and heavy-duty charging sites where maximum power, reliability, and operational efficiency are essential.



Key Benefits:

- Up to 400 kW ultra-fast DC charging power
- Two CCS2 connectors with dynamic power distribution
- 32” LCD touchscreen with real-time charging information
- Multiple charging start options: RFID, app, QR code, Autocharge, manual
- LAN and 4G connectivity
- Integrated power distribution with Boost Mode up to 400 A
- Robust galvanized steel enclosure for demanding outdoor operation

	DC PRO 400 kW
Order code	MEV400DRENG5CCS
Charging mode	Level 3, Mode 4
Connector type	2 x CCS2
Charging control	OCPP, Autocharge, button/password, RFID Card, Web APP, QR code
Contactless interoperability	Supporting international & dual standards, Mifare 13.56 MHz and others.
Internet connection	4G / Ethernet LAN
IP protection	IP54
Impact strength	IK10
Display	LCD 32’’ touchscreen (IK08)
Communication protocol	OCPP1.6 J / OCPP2.0 Upgradeable
Power distribution	Dynamic, between 2 connectors
Casing material	Galvanized and painted steel
Cooling method	Forced Air Cooling
Power network configuration	TN-S / TN-C-S / TT
Peak efficiency	≥97%
Noise level	≤60 dB
Power meter	DC MID
Mounting	Floor mounted
Standby consumption (Wh)	≤100 W
Input current	0 ~ 614 A
Output power	400 kW
DC output voltage range	150 ~ 1000 V
DC output current	0 ~ 400 A
Power Limiting	Available
AC power Input rating	AC 400V ±10%
Suggested min AC cable line	3×185 + 2×95 mm²
Storage temperature	-40 to 70°C
Operating temperature	-25 to 50°C
Operating humidity	5%~95% (no condensation)
Grid frequency	50/60 Hz
DLM function	Available, not included
Altitude	≤2000m
Electrical protection	Input Over- and Low Voltage, Output Over-Voltage and Current, Short-Circuit
Dimensions gross, mm	2500 (h) x 1700 (w) x 1700 (d)
Weight, kg	660

MOREK

Creating a better future for You



ev.morek.eu

End-to-End EV Charging Solutions with the Best Price-Quality-Support Ratio

Get access to exclusive EVC tools and insight

Gain access to best-in-class products with the market's best Price-Quality-Support ratio and unlock every opportunity in the EV market.



For residential and small commercial use



Perfect for company fleet and workplaces



For commercial buildings and public spaces



Solutions for large-scale installations up to 960 kW



All tools to create a end-to-end charging point.

- **Best Price-Quality-Support Ratio:**
  Affordable yet reliable solutions for every project.
- **Comprehensive Range:**
  Products tailored for various scales, from residential to commercial.
- **Technical Expertise:**
  Our support ensures smooth installations and operations.
- **Partner Network:**
  Access products easily through our trusted wholesalers.

CHARGE FORWARD MOREK

Morek PRO-series 480 kW DC satellite solutions



The Morek Ultra Charge HUB system is built as a modular high-power charging solution for locations with heavy EV traffic.

Instead of integrating all power electronics inside a single charger, the system separates the power generation and the charging points.

At the core of the system is the DC480 kW Power Cabinet, which converts AC power into high-power DC and manages the distribution of energy across the charging network.

The charging points themselves are satellite chargers, installed closer to the parking spaces.

They are available in two versions:

- Satellite Stand with liquid cooling – designed for maximum charging performance and long high-power sessions.
- Satellite Stand with air cooling – a simpler solution for locations where slightly lower cable cooling requirements are sufficient.

Multiple satellite chargers can be connected to a single power cabinet, allowing the system to distribute power dynamically between vehicles and scale according to site requirements.

This architecture enables ultra-fast charging, flexible installation, and efficient use of available power in large charging hubs.

Ultra-High Charging Power

Up to 480 kW of available power enables ultra-fast charging for high-traffic locations and commercial fleets.

Scalable Charging Architecture

Multiple satellites can be connected to a single cabinet, enabling scalable charging hubs up to 960 kW.

Dynamic Power Distribution

The system intelligently distributes power between connected satellites to maximize charger utilization.

Optimized Infrastructure Layout

Separating power electronics from charging points allows flexible installation and easier site planning.

High Reliability for Public Charging

Industrial-grade design ensures stable operation in demanding environments and continuous high-power usage.



DC 480 kW Power Cabinet (HUB)

With a total output of up to 480 kW and support for parallel operation up to 960 kW, it delivers a flexible and future-ready fast charging infrastructure.



Order code	MEV480NENNNXPOW
AC Input:	
Input Voltage	3P+N+PE 400VAC±10%
Input Current 1/2	0 - 410 A
Frequency	50/60Hz
Power Factor	Rated output load PF≥0.99
THDi	THDi: ≤5%
DC Output:	
Output Voltage Range	150 ~ 1000 V
Constant Power Range	300 ~ 1000 V
Maximum Output Current (Single connector)	300 A
Number of Output connectors	1 - 12 (Recommended: 8)
Additional:	
Efficiency	Full load efficiency at rated output ≥97%
Standby Power Consumption	≤100 W
Communication Interface	Ethernet, 4G
Communication Protocol	OCPP1.6 J / OCPP2.0 Upgradeable
Power Limitation	Supported
IP Rating	IP54
IK Rating	IK10 (Screen IK08)
Operating Temperature	-25 to +55°C
Relative Humidity	5%~95% (no condensation)
Altitude	≤2000m
Noise level	≤70 dB
Installation Method	Floor-mounted
Cooling Method	Air-cooled
Dimensions (W x D x H)	1300 x 900 x 1800
Weight, kg	660
Protection	Input over-voltage protection, Input under-voltage protection, Leakage protection, Output over-voltage protection, Short-circuit protection, Over-current protection

DC without Cooling satellite

The Morek DC Satellite 300 kW Charger without cooling is a high-power DC fast charging solution designed for demanding public and commercial charging environments that do not require liquid cooling. Delivering up to 480 kW DC output with a wide voltage range150–1000 V.

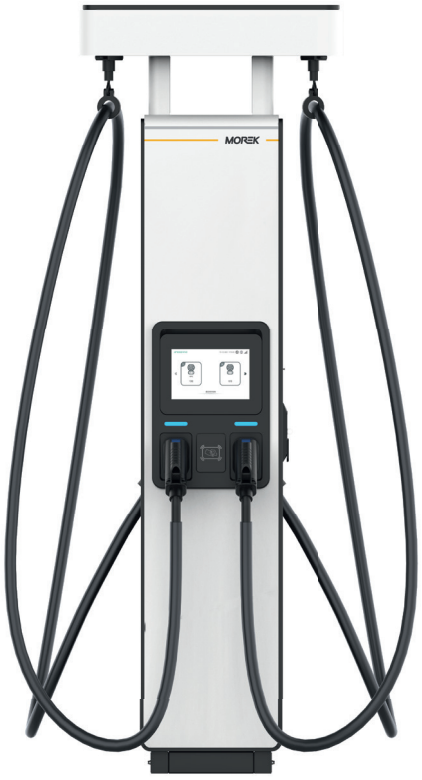

DC 480 kW Power Cabinet

product ID: MEV480NENNNXPOW



Order code	MEVP300DRENS5CCSF
AC Input:	
Rated Power	230 VAC ±10%
Input Current	5 A
Frequency	50/60Hz
DC Output:	
Input/Output Voltage Range	150 ~ 1000 VDC
Constant Power Range	300 ~ 1000 VDC
Output Type	2*CCS2
Single Gun Output Current	300 A
Additional:	
Charging Type	Mode 4; Case C
Standby Power Consumption	≤ 30 W
Communication Interface	Ethernet
Communication Protocol	OCPP1.6 J / OCPP2.0 Upgradeable
Display	LCD 7'' touchscreen
Startup Method	Local start, RFID, Button; Platform start; POS machine (optional)
Gun Head Current Limit	Supported (Web-based implementation available)
IP Rating	IP54
IK Rating	IK10 (screen supports IK08)
Operating Temperature	-25°C to +55°C
Relative Humidity	5% RH to 95% RH (non-condensing)
Altitude	≤2000m
Noise Level	≤ 55dB
Installation Method	Floor-mounted
Cooling Method	Air-Cooling
Cabinet Dimensions (W x D x H), mm	750 x 300 x 2100
Weight, kg	150
Protection	Current- leakage protection, Output over-voltage protection, Short circuit protection, Over-current protection

DC 480 kW with Cooling satellite

The Morek DC Stand 480 kW Charger with Liquid Cooling is a high-performance DC fast charging solution designed for high-power applications where compact design, low noise, and maximum charging current are required.



Order code	MEVP500DRENS3CCSF
AC Input:	
Rated Power	230 VAC ±10%
Input Current	5 A
Frequency	50/60Hz
DC Output:	
Input/Output Voltage Range	150 ~ 1000 VDC
Constant Power Range	300 ~ 1000 VDC
Output Type	1*CCS2 (one liquid-cooled terminal occupies two outputs from the main unit)
Single Gun Output Current	500 A (600 A for 10 minutes)
Additional:	
Charging Type	Mode 4; Case C
Standby Power Consumption	≤ 30 W
Communication Interface	Ethernet
Communication Protocol	OCPP1.6 J / OCPP2.0 Upgradeable
Display	LCD 7" touchscreen
Startup Method	Local start, RFID, Button; Platform start; POS machine (optional)
Gun Head Current Limit	Supported (Web-based implementation available)
IP Rating	IP54
IK Rating	IK10 (screen supports IK08)
Operating Temperature	-25°C to +55°C
Relative Humidity	5% RH to 95% RH (non-condensing)
Altitude	≤2000m
Noise Level	≤ 55dB
Installation Method	Floor-mounted
Cooling Method	Liquid Cooling (oil cooling)
Cabinet Dimensions (W x D x H), mm	1000 x 300 x 2100
Weight, kg	180
Protection	Current- leakage protection, Output over-voltage protection, Circuit protection, Over-current protection

Reliable tools and components to support smooth and professional installations.

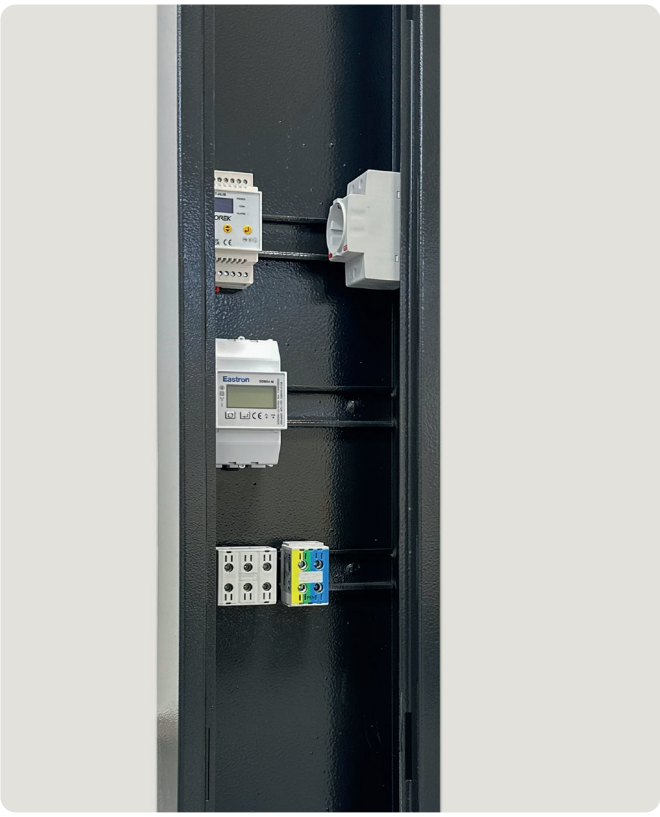

Versatile Installation Options:

Choose from wall or ground mounting, concrete or galvanized foundations, and solutions for both AC and DC chargers.

Professional-Grade Components:

High-quality accessories like stands with built-in DIN rails ensure long-term durability and easy integration of add-ons.

Optimized Energy Use:

Dynamic Load Management (DLM) and current transformers help balance power across multiple chargers, avoiding grid overload.

Installation Flexibility:

Modular components such as ground tools and stands support scalable solutions and fast setup in various environments.

Support your customers with a Certified Partnership and complete EV charging solutions.

With the best Price-Quality-Support ratio, you can count on us from setup to service. Our end-to-end approach helps you deliver seamless installations and ongoing value with full confidence.

Morek accessories are designed for long-term durability and flexible use across various project scales. From weather-resistant materials to standardized components like DIN rails, every detail supports a seamless installation process. Compatible with both AC and DC chargers, the system adapts easily to different environments—whether residential, commercial, or public. Scalable, secure, and future-ready, these accessories ensure a professional setup from the ground up.

Target Groups

- **Installers and Technicians:** Reliable components for smooth setup.
- **Project Managers:** Ensuring compatibility and completeness for larger installations.
- **Businesses Upgrading Infrastructure:** Adding advanced capabilities to existing setups.



Cable Management System for DC PRO Chargers

The Morek DC Cable Management Systems are designed to support safe, organized, and user-friendly handling of heavy DC charging cables across different power levels.



Product name	Order code
DC60 cable management system	MEVAHDC60CMS
DC120/180 cable management system	MEVAHDCSDACMS
DC240/320 cable management system	MEVAHDC2432CMS

Engineered specifically for Morek DC chargers, these systems reduce cable strain, improve ergonomics, and help extend cable lifespan while maintaining a clean and professional charging area.

- Cable management systems for Morek DC charging stations
- Available variants for DC 60 kW, DC 120/180 kW, and DC 240/320 kW chargers
- Improves cable handling, safety, and user comfort
- Reduces mechanical stress on charging cables and connectors
- Enhances durability and extends cable service life
- Designed for seamless integration with Morek DC charger installations
- Ideal for commercial, fleet, and public DC charging locations



Morek Concrete Foundations for DC PRO Chargers

Product name	Order code
AC and DC stand concrete foundation base	MEVAACDCNFUND
Morek DC60 PRO charger	MEVA60DCNFUND
Morek DC120 and DC 180 PRO chargers	MEVA1218NFUND
Morek DC240 and DC320 PRO chargers	MEVA2432NFUND

Specifically engineered for the secure installation of Morek DC PRO chargers, ensuring stability, compatibility, and streamlined setup.

Morek AC Charger Stand for one or two chargers

Order code	MEV004N7021STD (one)	MEV001N7021STD (two)
Stand finish:	RAL 7021 (dark gray)	
Height:	1520 mm	
Depth:	100 mm (348 with base)	
Width:	200 mm (398 with base)	



Durable and versatile charging stand, designed to securely accommodate one or two chargers for residential, commercial, or public applications.

- Single or Dual Charger Setup: Flexible design to mount one or two AC chargers
- Built-in DIN Rails: allow for the simple installation of additional components such as circuit breakers or load management devices.
- Lockable Enclosure: Provides extra security for electrical components and prevents unauthorized access.
- Concrete Foundation: Ideal for stable and permanent setups in high-traffic or public areas.
- Metal Jig for Soil Mounting: Ensures secure placement in soft ground without requiring a full concrete foundation

Morek Ground Tool Foundation

Order code	MEV003N7021STD
Finish:	Galvanized
Height:	1000 mm
Depth:	245 mm
Width:	360 mm

Morek AC Charger Stand ground-mounting metal frame. Engineered for durability and ease of use as an alternative to concrete grounding for appropriate soil types.

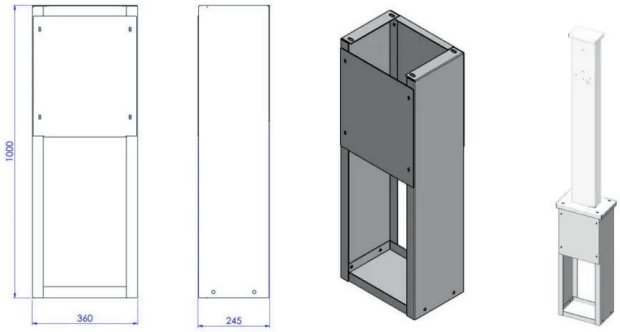



Morek DC Charger Stand

Order code	MEV002N9003STD
Stand finish:	RAL 9003 (white)
Height:	1563 mm
Depth:	100 mm (250 with base)
Width:	200 mm (400 with base)



A durable and versatile solution for mounting single 30 kW DC charger, designed for quick installation and long-lasting performance in diverse environments.

- Single Charger Compatibility: Optimized for securely mounting one 30kW DC charger.
- Durable Finish: Galvanized and painted for exceptional rust resistance and weather durability.
- Complete Installation Kit: Includes all required bolts and screws for quick and hassle-free setup.
- Foundation-Mounted: Designed to be installed on a stable base for maximum support and durability.
- Adaptable for Various Locations: Perfect for commercial, industrial, and public settings.

Morek Concrete Foundations for Morek charger stands

Product name	Order code
AC and DC stand concrete foundation base	MEVAACDCNFUND

Specifically engineered for the secure installation of Morek DC chargers and AC charger posts, ensuring stability, compatibility, and streamlined setup.

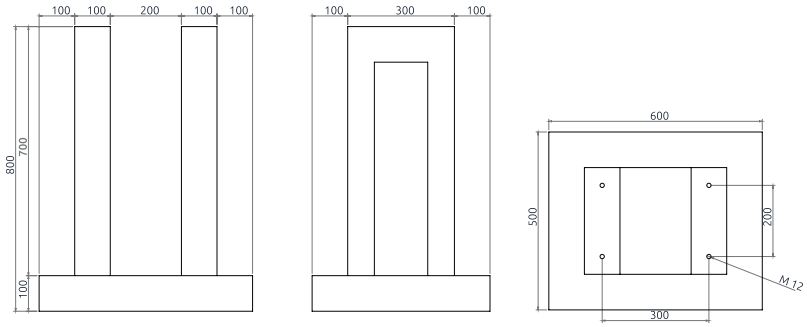

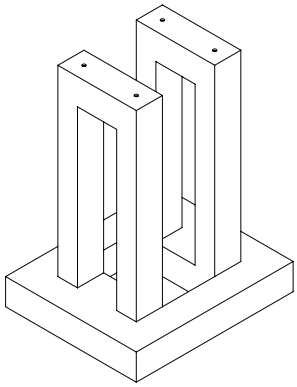

Dynamic Load Management (DLM): Efficient. Scalable. Future-ready.

Morek's DLM system ensures balanced power distribution across multiple EV chargers—without the need for major upgrades or complex setups. Designed for installers, building managers, and EV charging operators who need a solution that just works.

- **Quick installation –** no complicated setup, saves time on-site
- **Easy configuration –** intuitive setup, no special expertise required
- **Works without internet –** uses local communication, no network connection needed
- **Easily expandable –** new chargers can be added later without replacing the system
- **Wired communication –** stable and reliable, even where Wi-Fi or mobile signal is weak or unavailable

Power Distribution:

Efficiently allocates power across chargers, ensuring stable system performance and charging reliability without exceeding the available electrical capacity.

Cost Savings:

Reduces or eliminates the need for expensive infrastructure upgrades to accommodate peak loads.

Flexibility and Scalability:

Adjusts dynamically to varying conditions, including fluctuating power availability and the number of charging EVs.

Enables expansion of EV charging infrastructure as demand grows without significant electrical system overhauls.

Sustainable Growth:

Supports the transition to a greener future by managing the increasing EV charging demand efficiently and sustainably.

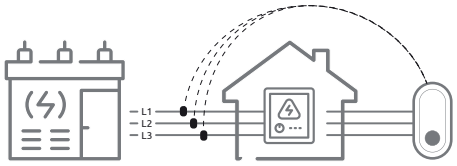

Three-Phase LOAD Management

A widely used solution in apartment buildings and private homes where available electrical capacity is limited. The system automatically reduces charging power when other high-consumption appliances – like an oven or some heater – are in use.

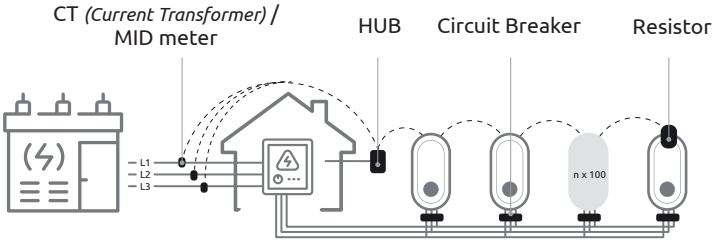

Multiple Chargers in a Row – Up to 100 Units

When installing two or more chargers, the available energy can be dynamically shared between them. For example, if two cars are charging simultaneously, they will automatically divide the remaining power from the building or household evenly.

DLM (Dynamic Load Management) Controller & CT-HUB for Morek AC ONE-Series

Product ID:	MEVX03D3P0HUB
Input current:	0~1000A
Rated Voltage:	230VAC
Voltage Range:	100-277V
Rated Frequency:	50/60Hz
Power consumption:	2W
Max length of wire:	200m
Display:	0.96 inch OLED
Interface:	Button | BLE (to be opened)
Communication:	RS485
Rated quantity:	up to 100 chargers
Dimension (H x W x D):	88mm x 59mm x 53mm



The Morek HUB DLM (aka DLB or LMC) controller evenly distributes power among multiple chargers, optimizing grid use within current limits and charging needs. For locations with multiple chargers.

DLM Controller for DC PRO-Series

Product ID:	MEVX04DC3PDLM
Voltage Range:	187~253 VAC
Output Voltage / Power:	12 ~ 12.1 VDC, 50W
Connection Type:	L+N+PE
Connected units:	Master max 7 chargers + Slave max 13 chargers
Op. Temperature:	-20°C~+50°C
Relative Humidity:	5%RH~95%RH without condensation
Altitude:	≤2000m
Installation:	Wall Mounting
Dimension (H x W x D):	290mm × 155mm × 430mm
Weight:	6kg



Efficiently allocate power and maintain balanced, reliable charging for scalable DC charging networks.

DLM Controller for DC CORE-Series

Product ID:	MEVX05COREDLM
Voltage Range:	100~380 VAC
Rated Frequency	50/60Hz
Input current:	0 ~ 32A
Max connected quantity:	40 chargers
Op. Temperature:	-20°C~+50°C
Communication:	RS485, RJ45
Display:	4.3'' LCD touch screen
Installation:	Wall Mounting
Dimension (H x W x D):	250 mm × 150 mm × 130mm
Weight:	2kg



Current Transformers (CT) for Load Balance: 120A, 400A, 600A, 1000A

Tailored to optimize power management for various capacities, our CT options ensure compatibility with solutions ranging from residential setups to large-scale commercial installations.

- **Optimized for DLM:** Easy to use with DLM controllers.
- **Reliability:** Ensures seamless, simultaneous charging of multiple EVs without overloading the grid.
- **Cost-Effectiveness:** Avoids costly upgrades by utilizing existing infrastructure effectively.
- **Sustainability:** Encourages eco-friendly charging practices by aligning with renewable energy sources.

CT 120A	MEVX120S02P5MCT
Rated input: 120A | Output: 40mA | Cable: 5 m | diagonal: 16 mm	
CT 120A (clamp)	MEVX02N1P5MCT
Rated input: 120A | Output: 40mA | Cable: 5 m | Clamp diagonal: 16 mm	
CT 400A (clamp)	MEVX4001P5MCT
Rated input: 400A | Output: 40mA | Cable: 5m | Clamp diagonal: 36 mm	
CT 600A (clamp)	MEVX6001P5MCT
Rated input: 600A | Output: 40mA | Cable: 5 m | Clamp diagonal: 45 mm	
CT 1000A (clamp)	MEVX10001P5MC
Rated input: 1000A | Output: 40mA | Cable: 5 m | Clamp diagonal: 55 mm	



CT for Load Balance, 120A – 400A



CT for Load Balance, 600A / 1000A

MID Meters

Product name	Order code
MID-meter SDM54-M/-MB/-2T	MEVX03D3P0MID
MID-meter SDM630MCT, up to 1000A	MEV01SDM630MCT
MID-meter EM357 Phoenix Contact	1744495



Accurate Energy Measurement for Advanced Applications.

The MID-certified SDM54 series is a compact, reliable, and versatile three-phase digital energy meter designed for precise active power measurement. Built to meet MID (Measuring Instruments Directive) standards, this device ensures accurate billing and compliance with European regulations.



- **Commercial Buildings:** Accurate energy measurement for tenant billing.
- **EV Charging Stations:** Monitors power usage for billing and load management.
- **Industrial Facilities:** Tracks energy consumption for operational efficiency.

MOREK

Creating a better future for You



Install Smarter. *Find Answers Faster.*

Whether you're planning, installing or maintaining EV chargers, the information you need is always available.

Access technical documentation, installation guides, product datasheets and support resources for all Morek EV charging solutions.

- Product datasheets and technical specifications
- Installation manuals and commissioning guides
- Software, DLM and backend instructions
- Troubleshooting and support materials
- Latest product documentation

CHARGE FORWARD MOREK

wiki.morek.eu

morek.eu

Morek Poland
+48 501 642 007
morekpl@morek.eu

Morek Czech Republic
+420 727 939 795
morek@morek.cz

Morek Portugal
+351 932 450 187
sales@morek.pt

Morek France
+33 7 81 38 34 46
morek@morek.fr

Morek Finland
+358 40 770 8030
myynti@morek.fi

Morek Estonia
+372 6 041 423
morek@morek.ee

Morek Latvia
+371 26 186 699
moreklv@morek.eu

Morek Lithuania
+370 67 382 192
info@morek.lt

Morek Slovakia
+421 918 159 385
morek@morek.sk

Morek Export
+420 727 835 176
export@morek.eu

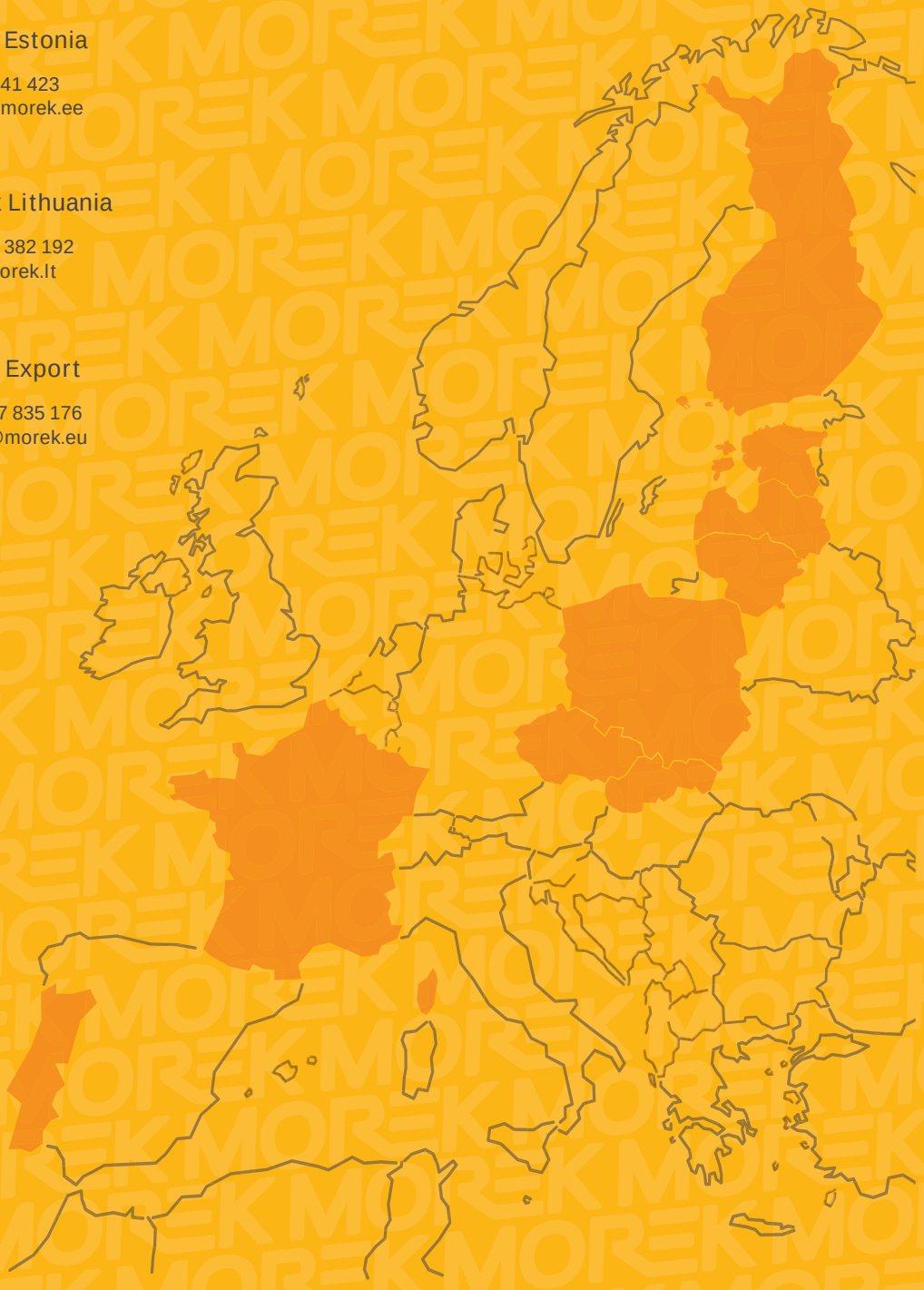

CHARGE FORWARD MOREK