MOREK

Creating a better future for You

ELECTRICAL COMPONENTS

2019

Morek brand products are quality products

Morek company overview

15 years of experience in electrotechnical field

Today, Morek Group includes 6 companies in 6 different European countries. The founding company – Morek IT OÜ – was established at the beginning of 2004 in Estonia. The higher education in the field of electrical engineering and previous relevant long-term professional experience of the enterprise founders facilitated the company's successful start-up and rapid growth. Today, we are a very strong experience-based group that has field-specific experience of 15 years.

Service staff of dedicated persons

We are a company that is a partner to its customers. Being a good partner for us primarily means understanding the needs of different market segments and providing services/ products to those customers for whom we can create more value than our direct competitors. Successful sales promotion for us includes several activities that we engage in both pre-sale and post-sale to ensure customer satisfaction and long-term customer relations.

The entire Morek Group staff is committed to working every day to attain these objectives. We know that this is the only way for both our customers and ourselves to be successful.

Steady growing over the years

Morek Group has steadily grown every year since its establishment. The growth has occurred during the construction sector boom as well as the global recession. Today, we are represented in Finland, Estonia, Latvia, Lithuania, Poland and Czech Republic. Steady growth will also continue in the coming years.

Credit rating amongst the TOP 16% companies in Estonia

Invoices paid on time, sufficient amount of products in the warehouses, timely paid salaries, tools suitable for the employees, etc. – all these things require the availability of sufficient circulating capital. Morek IT OÜ, the parent company of Morek Group, has an AA credit rating which places it among the TOP 16% of companies in Estonia.

Continuous representation at exhibitions

Following new market trends, getting an overview of competitors' activities, receiving feedback on products and meeting suppliers and customers in order to find new, innovative and suitable solutions are only a few keywords of what our aims are at international professional exhibitions. That is why we consider participation at these exhibitions to be extremely important. Our booth can be found at major fairs in the field of electrotechnics such as Amper Fair in Czech Republic, Energetab in Poland and Hannover Messe in Germany.

Carefully selected producers from Western European countries

Our product portfolio contains only quality products, which are made by following very high standards throughout the whole production process. We cooperate only with manufacturers who have years of experience in production, product development and research. In that way, we can be certain of offering products of the same quality as well-known large corporations.

Widest portfolio for cable connectors available on the market

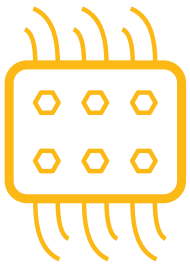

We mainly specialise in cable connectors. After long-term market observation, product selection and purchasing negotiations, we can say for certain that we have the widest portfolio of cable connectors on the market.

Range of 1,000+ Morek brand products

It is important for every customer to use their time efficiently and concentrate on their main activity. We have compiled our portfolio in such a way that it represents the entire product range of cable connectors, and also accommodates the most specified expectations. Therefore, the portfolio includes more than 1,000 items and the number continues to grow.

Since we are sure of the quality of the offered products, we have assembled them all under the Morek quality brand. Selling products under our own brand name provides our guarantee that the supplied product meets the highest quality standard.

Certificates, declarations issued to/by Morek Group

In addition to quality, it is also essential that the products are safe and meet the criteria of existing regulations and standards. In our product range, you find items for which certifications have been issued by internationally acknowledged certification bodies such as UL, FIMKO and Lloyd's.

CE and RoHS declarations of conformity are self-evident keywords in the case of our product portfolio.

Morek brand products offered at a good price-quality ratio

The Morek Group companies are represented in 6 different countries so we have a permanent overview of the product range offered on our home markets and the price range. We have direct contact with different manufacturers and considerable purchase volume for bulk purchases. As a result, we can offer our customers products that are always above the average in terms of quality offered on the market while at reasonable prices. Our entire product portfolio is compiled by considering such price and quality criteria.

Innovation

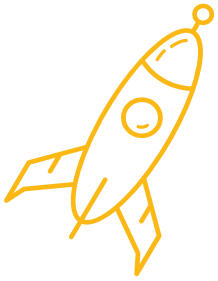

For us, innovation begins with seemingly small things.

On the one hand, it is everything that makes the customers life easier, e.g. placing a product order that is faster and simpler in comparison with what is usually offered on the market, or a quickly navigable product catalogue.

On the other hand, it is the products offered to the customers that differ from what is available in a standard range.

We also offer tailor-made solutions, which take into account the requirements of a particular customer and are especially produced at the plant for them. We have also added some products to the portfolio that consider both the market demands and what the customers may not know to ask for, yet which make their basic work easier and save time, installation space and money (e.g. OTL terminals, Moflex, gel joints, cable entry plates, MAC terminals, etc.)

Our manufacturing plants have the required competence, flexibility and production capacity for testing and manufacturing special orders over many decades.

5-year guarantee

We are convinced of our products' reliability and that is why we give a 5-year guarantee on all our products.

Timely deliveries

Our central warehouses are located in Estonia, Lithuania and Czech Republic. Goods can be shipped from any of these warehouses. Depending on the destination location, the express delivery time can be 24 h or even a couple of hours. Thereby, we ensure that the customers will get their goods exactly by the time they need them.

Quick claim settlement

We respond to all our customers' possible claims as promptly as possible. Unlike large corporations, we are able to solve technical problems with products very quickly because there are few management levels in our organisation – communication between different countries and employees takes place quickly and directly, and a production specialist of whatever product is always only a maximum of two contacts away from the customer

Our promise: Morek brand products are quality products. We never compromise on that

One of the fundamental principles of the company's operation is the promise that all the employees know the basis on which the products are selected and the services are designed. According to this, the customer can make their most important choice – whether the products and services of this company are for them or not.

Our promise is that Morek brand products are quality products. Since this is the foundation of our business success, we never compromise on that.

Conflict minerals policy

Morek Group supports the goal of ending violence, human rights violations and environmental devastation in the DRC. We comply with any requirements applicable to our Group under the US "Conflict Minerals" rules and will follow EU law under "Conflict Minerals" regulation as soon as it will be confirmed.

High runners

Universal terminals OTL
Page 7

Distribution blocks OJL
Page 17

Distribution blocks Moblock
Page 21

Device connectors
Page 29

Insulated copper flexibars Moflex
Page 59

Sealing and edge protection profiles
Page 67

Cable entry plates
Page 73

Splitting cable entry plates (IP55)
Page 87

Gel joints Break
Page 98

Contents

Universal terminals OTL

1000 V AC/DC

Bimetal (AL/CU)

Class A

Certified according to standards EN 61238-1 and EN 60947-7-1

Universal terminals OTL are designed for copper and aluminium conductors. The terminals are suitable for all types of copper or aluminium conductors with cross-section up to 240 mm². Multiple copper wires can be placed to the universal terminals OTL blocks according to the respective terminal type (see Table of universal terminals OTL wiring connectivity on page 9). IP protection class for OTL terminals is IP20.

Certification and product safety

Universal terminals OTL are tested and certified by following standards:

EN 60947-7-1:2009 „Low-voltage switchgear and control gear - Part 7-1: Ancillary equipment - Terminal blocks for copper conductors"

EN 61238-1:2003 „Compression and mechanical connectors for power cables for rated voltages up to 30 kV (Um = 36 kV) - Part 1: Test methods and requirements"

All connectors used inside switchgears or similar appliances must fulfil these requirements.

EN 61238-1:2003 for copper and aluminium cables are divided into two classes.

Class A (heat cycle and **short-circuit tested**) - These are connectors intended for electricity distribution or industrial networks in which they can be subjected to short-circuits of relatively high intensity and duration. Therefore, Class A connectors are suitable for most applications.

Class B (heat cycle tests only, **not short-circuit tested**) - These are connectors for networks in which overloads or short-circuits are rapidly cleared by the installed protective devices, e.g. **fast-acting fuses.**

Universal terminals OTL are tested and certified class A connectors.

For choosing safe and reliable connector, always make sure that the terminal is equipped with CE and Class A markings with the symbol of certifying institute, for example FI -mark.

Material classification according to UL 94 V-0 standard (vertical burning test)

Criteria Conditions	94 V-0	94 V-1	94 V-2
Total flaming combustion for each specimen	**≤ 10 sec**	≤ 30 sec	≤ 30 sec
Total flaming combustion for all 5 specimens of any set	**≤ 50 sec**	≤ 250 sec	≤ 250 sec
Flaming and glowing combustion for each specimen after second burner flame application	**≤ 30 sec**	≤ 60 sec	≤ 60 sec
Cotton ignited by flaming drips from any specimen	**No**	No	Yes

Universal terminals OTL wiring connectivity

In case of Aluminum wire, only one wire is allowed to connect per connection

	Conductor cross-section (mm²) / number of copper wires per connection															Tightening torque	In (A)
Type	**1,5**	**2,5**	**4**	**6**	**10**	**16**	**25**	**35**	**50**	**70**	**95**	**120**	**150**	**185**	**240**	**(Nm)**	**AL / CU**
OTL 16	3 pcs	3 pcs	2 pcs	2 pcs	1 pcs	1 pcs										1,5 Nm (1,5 - 6 mm²) 7 Nm (10 - 16 mm²)	75 / 82
OTL 35 OTL 35-2 OTL 35-3X OTL 35-5X		3 pcs	3 pcs	3 pcs	3 pcs	2 pcs	1 pcs	1 pcs								3 Nm (2,5 - 16 mm²) 6 Nm (25 - 35 mm²)	120 / 135
OTL 50 OTL 50-2 OTL 50-3	3 pcs	3 pcs	3 pcs	3 pcs	3 pcs	3 pcs	2 pcs	1 pcs	1 pcs							1,5 Nm (1,5 - 2,5 mm²) 5 Nm (4 - 10 mm²) 10 Nm (16 - 50 mm²)	145 / 160
OTL 95 OTL 95-2 OTL 95-3				3 pcs	3 pcs	3 pcs	3 pcs	2 pcs	1 pcs	1 pcs	1 pcs					12 Nm (6 - 25 mm²) 22Nm (35 - 95 mm²)	220 / 245
OTL 150 OTL 150-2 OTL 150-3							3 pcs	3 pcs	3 pcs	2 pcs	1 pcs	1 pcs	1 pcs			14 Nm (25 - 50 mm²) 30 Nm (70 - 150 mm²)	290 / 320
OTL 240 OTL 240-2								3 pcs	3 pcs	3 pcs	2 pcs	2 pcs	1 pcs	1 pcs	1 pcs	26 Nm (35 - 120 mm²) 40 Nm (150 - 240 mm²)	380 / 425

1 pole (2 holes) universal terminals OTL

	OTL 16	OTL 35	OTL 50
Grey	MAA1016A10	MAA1035A10	MAA1050A10
Blue	MAA1016B10	MAA1035B10	MAA1050B10
Yellow-green	MAA1016Y10	MAA1035Y10	MAA1050Y10
Red	MAA1016R10	-	MAA1050R10
Black	MAA1016S10	-	MAA1050S10
Technical data			
Conductor cross-section CU, AL (mm²)	1,5 - 16	2,5 - 35	1,5 - 50
Nominal voltage AC / DC (V)	1000	1000	1000
Nominal current (A)	82 (CU) / 75 (AL)	135 (CU) / 120 (AL)	160 (CU) / 145 (AL)
Width / Height / Length (mm)	13,5 / 39,5 / 45	16 / 40 / 45	18 / 43 / 50
Screw, hexagonal key	No. 4	No. 4	No. 5
Tightening torque (Nm)	1,5 Nm (1,5 - 6 mm²) 7 Nm (10 - 16 mm²) -	3 Nm (2,5 - 16 mm²) 6 Nm (25 - 35 mm²) -	1,5 Nm (1,5 - 2,5 mm²) 5 Nm (4 - 10 mm²) 10 Nm (16 - 50 mm²)
Mounting	DIN rail	DIN rail	DIN rail
Weight (g)	17	27	30
Package (pcs)	30	30	50 / 30

Dimensions

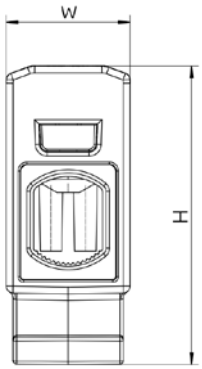

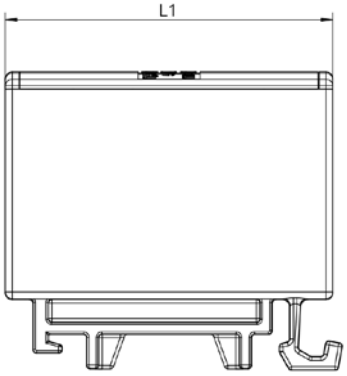

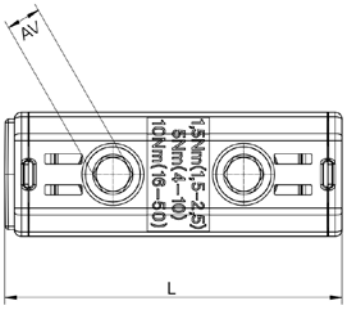

1 pole (2 holes) universal terminals OTL

	OTL 95	OTL 150	OTL 240
Grey	MAA1095A10	MAA1150A10	MAA1240A10
Blue	MAA1095B10	MAA1150B10	MAA1240B10
Yellow-green	MAA1095Y10	MAA1150Y10	MAA1240Y10
Red	MAA1095R10	-	-
Black	MAA1095S10	-	-
Technical data			
Conductor cross-section CU, AL (mm²)	6 - 95	25 - 150	35 - 240
Nominal voltage AC / DC (V)	1000	1000	1000
Nominal current (A)	245 (CU) / 220 (AL)	320 (CU) / 290 (AL)	425 (CU) / 380 (AL)
Width / Height / Length (mm)	25 / 51 / 84	31 / 54 / 84	37 / 65 / 106
Screw, hexagonal key	No. 6	No. 6	No. 8
Tightening torque (Nm)	12 Nm (6 - 25 mm²) 22 Nm (35 - 95 mm²) -	14 Nm (25 - 50 mm²) 35 Nm (70 - 150 mm²)	26 Nm (35 - 120 mm²) 46 Nm (150 - 240 mm²)
Mounting	DIN rail, screw	DIN rail, screw	DIN rail, screw
Weight (g)	65	100	195
Package (pcs)	20 / 10	20 / 10	10 / 3

Dimensions

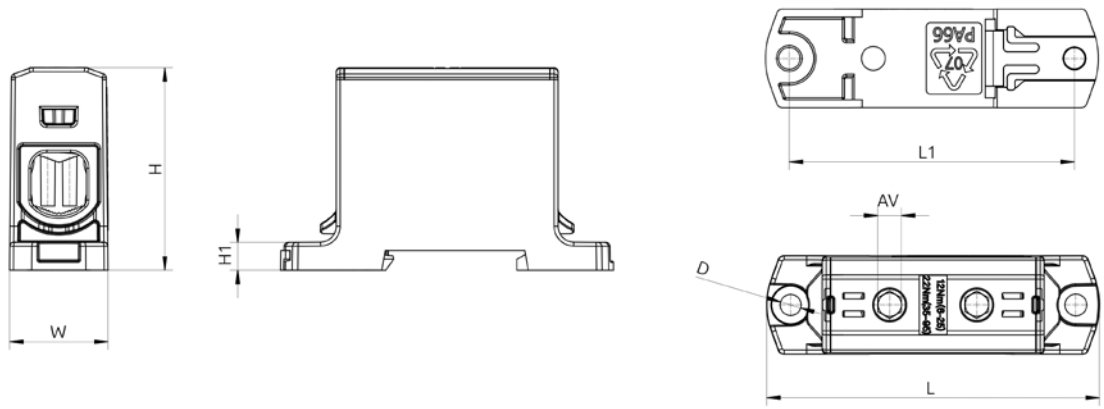

1 pole (4 holes) universal terminals OTL

	OTL 35-2	OTL 50-2
Grey	MAA2035A10	MAA2050A10
Blue	MAA2035B10	MAA2050B10
Yellow-green	MAA2035Y10	MAA2050Y10
Red	-	MAA2050R10
Black	-	MAA2050S10

Technical data

Conductor cross-section CU, AL (mm²)	2,5 - 35	1,5 - 50
Nominal voltage AC / DC (V)	1000	1000
Nominal current (A)	135 (CU) / 120 (AL)	320 (CU) / 290 (AL)
Width / Height / Length (mm)	27 / 40 / 46	30 / 43 / 49
Screw, hexagonal key	No. 4	No. 5
Tightening torque (Nm)	3 Nm (2,5 - 16 mm²) 6 Nm (25 - 35 mm²) -	1,5 Nm (1,5 - 2,5 mm²) 5 Nm (4 - 10 mm²) 10 Nm (16 - 50 mm²)
Mounting	DIN rail	DIN rail
Weight (g)	44	90
Package (pcs)	18	15

Dimensions

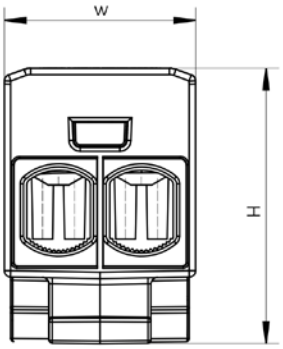

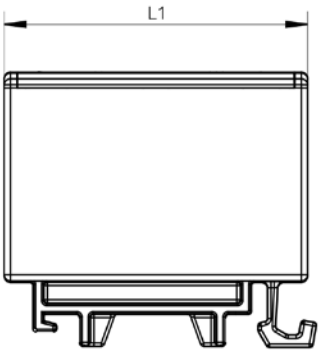

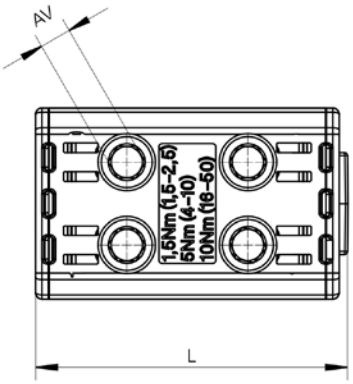

1 pole (4 holes) universal terminals OTL

	OTL 95-2	OTL 150-2	OTL 240-2
Grey	MAA2095A10	MAA2150A10	MAA2240A10
Blue	MAA2095B10	MAA2150B10	MAA2240B10
Yellow-green	MAA2095Y10	MAA2150Y10	MAA2240Y10
Red	MAA2095R10	-	-
Black	MAA2095S10	-	-
Technical data			
Conductor cross-section CU, AL (mm²)	6 - 95	25 - 150	35 - 240
Nominal voltage AC / DC (V)	1000	1000	1000
Nominal current (A)	245 (CU) / 220 (AL)	320 (CU) / 290 (AL)	425 (CU) / 380 (AL)
Width / Height / Length (mm)	42 / 51 / 84	51 / 54 / 84	60 / 65 / 106
Screw, hexagonal key	No. 6	No. 6	No. 8
Tightening torque (Nm)	12 Nm (6 - 25 mm²) 22 Nm (35 - 95 mm²) -	14 Nm (25 - 50 mm²) 30 Nm (70 - 150 mm²) -	26 Nm (35 - 120 mm²) 40 Nm (150 - 240 mm²) -
Mounting	DIN rail, screw	DIN rail, screw	DIN rail, screw
Weight (g)	125	170	340
Package (pcs)	30 / 15	10 / 5	6 / 3

Dimensions

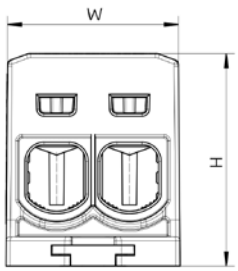

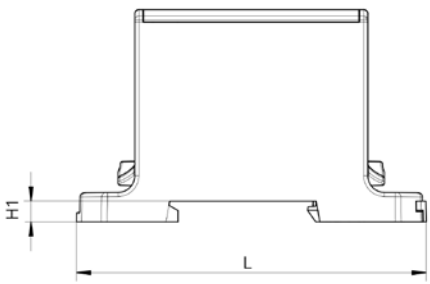

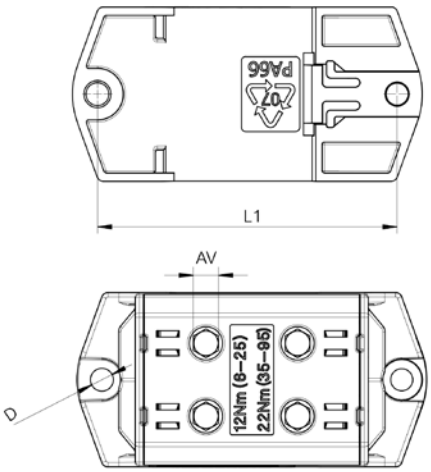

1 pole (6 holes) universal terminals OTL



	OTL 50-3	OTL 95-3	OTL 150-3
Grey	MAA3050A10	MAA3095A10	MAA3150A10
Blue	MAA3050B10	MAA3095B10	MAA3150B10
Yellow-green	MAA3050Y10	MAA3095Y10	MAA3150Y10

Technical data

Conductor cross-section CU, AL (mm²)	1.5 - 50	6 - 95	25 - 150
Nominal voltage AC / DC (V)	1000	1000	1000
Nominal current (A)	160 (CU) / 145 (AL)	245 (CU) / 220 (AL)	320 CU / 290 (AL)
Width / Height / Length (mm)	46 / 41 / 80	59 / 51 / 84	71 / 54 / 84
Screw, hexagonal key	No. 5	No. 6	No. 6
Tightening torque (Nm)	1,5 Nm (1,5 - 2,5 mm²) 5 Nm (4 - 10 mm²) 10 Nm (16 - 50 mm²)	12 Nm (6 - 25 mm²) 22 Nm (35 - 95 mm²) -	14 Nm (25 - 50 mm²) 30 Nm (70 - 150 mm²) -
Mounting	DIN rail, screw	DIN rail, screw	DIN rail, screw
Weight (g)	109	178	246
Package (pcs)	20	6	6

Dimensions

OTL 50-3
OTL 95-3

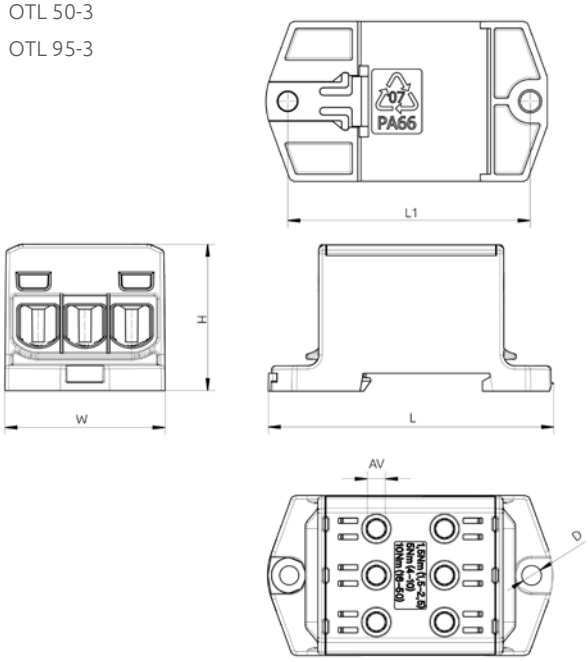

OTL 150-3

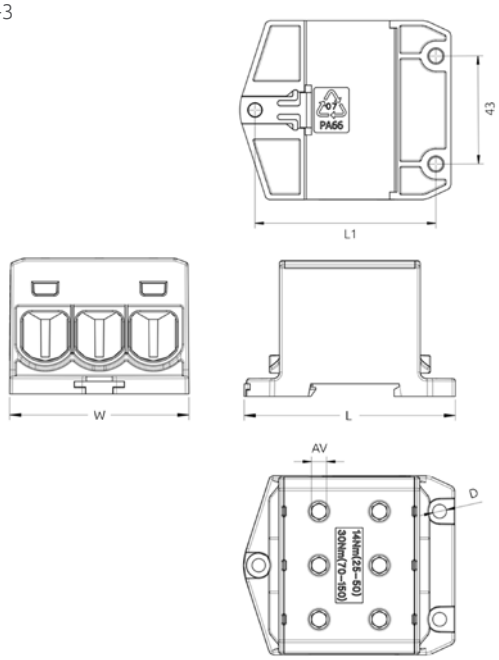

3 pole (6 holes), 5 pole (10 holes) universal terminals OTL



	OTL 35-3X	OTL 50-3X	OTL 35-5X
Grey	MAA1335A10	MAA1350A10	-
Grey, Blue, Yellow-green	-	-	MAA5035A10

Technical data

Conductor cross-section CU, AL (mm²)	2,5 - 35	1,5 - 50	2,5 - 35
Nominal voltage AC / DC (V)	1000	1000	1000
Nominal current (A)	3 x 135 (CU) / 3 x 120 (AL)	3 x 160 (CU) / 3 x 145 (AL)	3 x 135 (CU) / 3 x 120 (AL)
Width / Height / Length (mm)	46 / 40 / 46	49 / 43 / 49	79 / 40 / 65
Screw, hexagonal key	No. 4	No. 5	No. 4
Tightening torque (Nm)	3 Nm (2,5 - 16 mm²) 6 Nm (25 - 35 mm²)	1,5 Nm (1,5 - 2,5 mm²) 5 Nm (4 - 10 mm²) 10 Nm (16 - 50 mm²)	3 Nm (2,5 - 16 mm²) 6 Nm (25 - 35 mm²)
Mounting	DIN rail	DIN rail	DIN rail, screw
Weight (g)	70	81	120
Package (pcs)	20	20	10

Dimensions

OTL 35-3X
OTL 50-3X

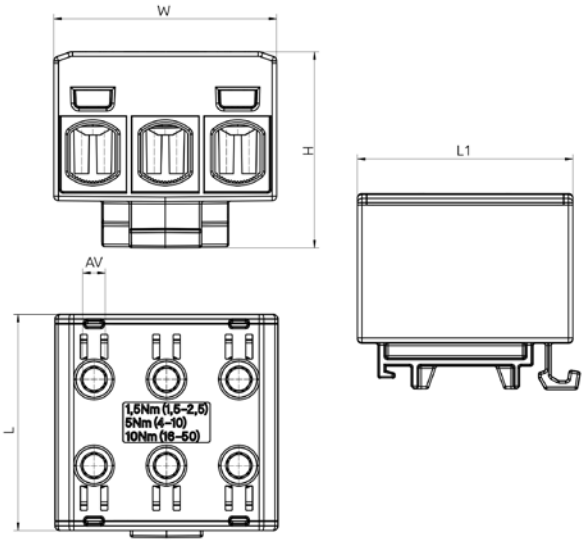

OTL 35-5X

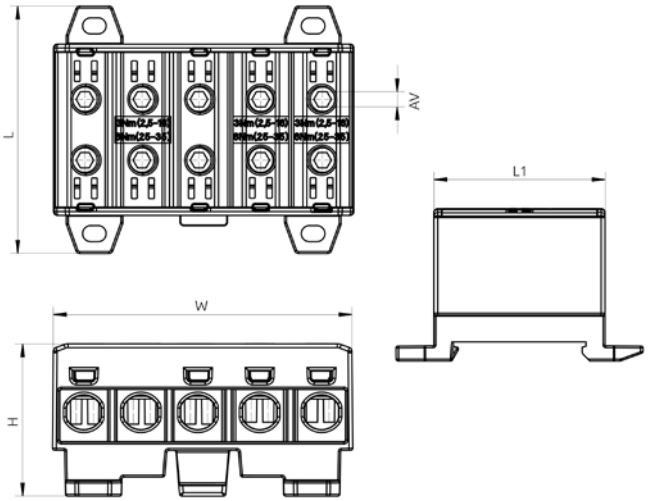

Protective plastic covers for universal terminals OTL

Protective plastic covers are offered as accessories for universal terminals OTL. They are used for blanking unused connection space or for maintaining IP20 protection class when using wire with smaller cross-section. These accessories are offered for terminals series OTL 50, OTL 95, OTL 150 and OTL 240.

	Finger guard OTL 50	Finger guard OTL 95	Finger guard OTL 150	Finger guard OTL 240
Grey	MAA0050A10	MAA0095A10	MAA0150A10	MAA0240A10
Technical data				
Width / Height / Length (mm)	14 / 31,5 / 10	18,3 / 45 / 10	22 / 47,5 / 10	28 / 57,5 / 10
Material	PA 66	PA 66	PA 66	PA 66
Weight (g)	0,8	1,4	1,7	2,7
Package (pcs)	10	10	10	10

Contact grease SR-1

- Lubrication grease & rust inhibitor for electrical connectors
- Used both indoors and outdoors

Materials

- Lithium thickened grease, containing antioxidants and corrosion inhibitors

Warning: prolonged or repeated skin contact may irritate the skin and produce dermatitis.

Advantages

- Good protection against both copper and steel corrosion
- Prevention of oxidation of aluminium surfaces
- Reduction of transition resistance while used with wire brush

Standards

- DIN 51502 K2K-30
- ISO 6743 ISO-L-XCCHA2

Contact grease SR-1 250 ml

	SR-1
Contact grease SR-1 250ml	MYA0001A10
Technical data	
Base oil viscosity / cSt at 40 °C	112
Base oil viscosity / cSt at 100 °C	10
Dropping point / °C	>180
Temperature range / °C	-30 to 110
Thickener	Lithium
SKF Emcor WWO distilled water / ISO 11007mod	0-0
Copper corrosion 24h / 100 °C / ASTM D4048	1b
Water resistance / DIN 51807 / 1	0-90
Oil separation 168h / 40 °C / IP121	6%

Distribution blocks OJL

1000 V AC/DC

Bimetal (AL/CU)

Up to
400 A
240 mm²

Class A

Certified according to standards EN 61238-1 and EN 60947-7-1

Distribution blocks OJL 200A, 280A

Distribution blocks OJL are intended for distributing conductors with larger cross-section to several smaller ones. These blocks are provided in 6 standard designs with a nominal connecting cross-section of 70 mm² AL/CU (6 outputs for copper cable), 120 mm² AL/CU (11 outputs for copper cable) and 240 mm² AL/CU (7 outputs for copper cable). AF and AFS models are designed for connecting (input) of flexibars 10 x 25 mm or several other bars of 1 x 25 mm (look more about insulated copper flexibars Moflex on page 59).

The screws are tightened by a hexagonal key. Blocks can be installed on a standard DIN rail or can be mounted using screws on a flat solid surface. Maximum operating temperature is 80 °C. Cover sealing is possible on AS and AFS models. Housing for all design types has a protection class IP20.

	OJL 200A	OJL 280A
Black / Grey	MAB1201S10	MAB1281S10
Blue / Grey	MAB1201B10	MAB1281B10
Green / Grey	MAB1201G10	MAB1281G10

Technical data

Conductor cross-section		
Input wire AL/CU (mm²)	1 x ◯ 10 - 70	1 x ◯ 35 - 120
Output wire CU (mm²)	6 x 2,5 - 16	4 x 2,5 - 10 5 x 2,5 - 16 2 x 6 - 35
Nominal voltage AC / DC (V)	1000	1000
Nominal current (A)	200 (CU) / 160 (AL)	280 (CU) / 250 (AL)
Width / Height / Length (mm)	32,4 / 46 / 75,8	44,4 / 51 / 97
Screw, hexagonal key	No. 3 / 5	No. 3 / 4 / 6
Tightening torque (Nm)	3 Nm (2,5 - 16 mm²) 6 Nm (25 - 35 mm²) 10 Nm (50 - 70 mm²) -	3 Nm (2,5 - 16 mm²) 6 Nm (25 - 35 mm²) 10 Nm (50 - 70 mm²) 19 Nm (95 - 120 mm²)
Mounting	DIN rail, screw	DIN rail, screw
Weight (g)	84	178
Package (pcs)	24	12

Dimensions

OJL 200A

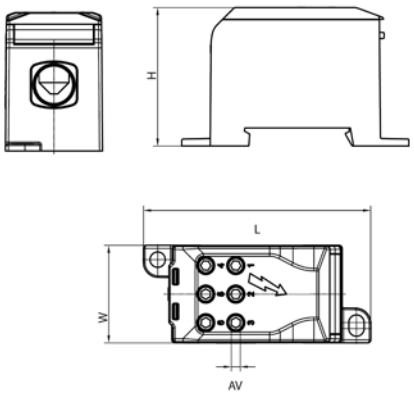

OJL 280A

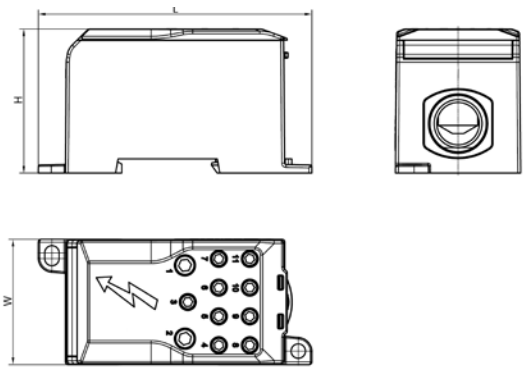

Distribution blocks OJL 400A

MOREK




	OJL 400A	OJL 400AS*	OJL 400AF	OJL 400ASF*
Black / Grey	MAB1401S10	MAB1402S10	MAB1403S10	MAB1404S10
Blue / Grey	MAB1401B10	-	MAB1403B10	-
Green / Grey	MAB1401G10	-	MAB1403G10	-
Technical data				
Conductor cross-section				
Input wire AL/CU (mm²)	1 x ◯ 95 - 240	1 x ◯ 95 - 240	1 x ▭ Flexible busbar 10x CU (1x25)	1 x ▭ Flexible busbar 10x CU (1x25)
Output wire CU (mm²)	4 x ⊞ 2,5 - 35 3 x ⊞ 6 - 50	4 x ⊞ 2,5 - 35 3 x ⊞ 6 - 50	4 x ⊞ 2,5 - 35 3 x ⊞ 6 - 50	4 x ⊞ 2,5 - 35 3 x ⊞ 6 - 50
Nominal voltage AC / DC (V)	1000	1000	1000	1000
Nominal current (A)	425 (CU) / 380 (AL)	425 (CU) / 380 (AL)	425 (CU) / 380 (AL)	425 (CU) / 380 (AL)
Width / Height / Length (mm)	51,4 / 51,2 / 100,3	51,4 / 51,2 / 100,3	51,4 / 51,2 / 100,3	51,4 / 51,2 / 100,3
Screw, hexagonal key	No. 4 / 5 / 8	No. 4 / 5 / 8	No. 4 / 5	No. 4 / 5
Tightening torque (Nm)	6 Nm (2,5 - 35 mm²) 10 Nm (6 - 50 mm²) 19 Nm (95 - 240 mm²)	6 Nm (2,5 - 35 mm²) 10 Nm (6 - 50 mm²) 19 Nm (95 - 240 mm²)	6 Nm (2,5 - 35 mm²) 10 Nm (6 - 50 mm²) 10 Nm (10x CU 1x25 mm²)	6 Nm (2,5 - 35 mm²) 10 Nm (6 - 50 mm²) 10 Nm (10x CU 1x25 mm²)
Mounting	DIN rail, screw	DIN rail, screw	DIN rail, screw	DIN rail, screw
Weight (g)	250	250	247	247
Package (pcs)	8	8	8	8

** Model can be sealed*

Dimensions

OJL 400A

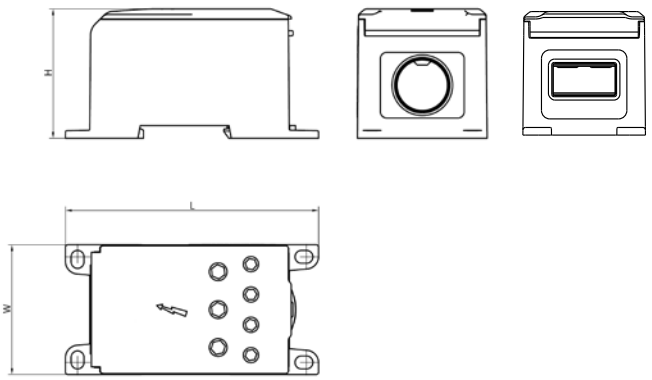

OJL busbar adapters

OJL busbar adapters are used for connecting OJL connectors to copper or aluminium busbars.
Materials: Tin plated copper

NEW

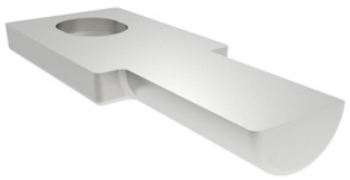

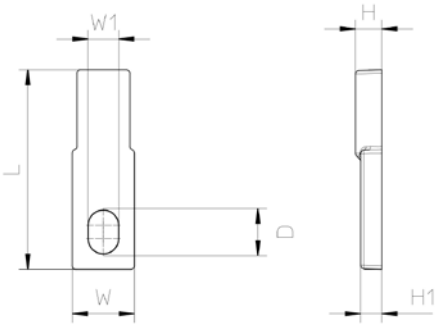

	BA 200A	BA 280A	BA 400A
Grey	MAB1201EBA	MAB1281EBA	MAB1401EBA

Technical data

D	9,8	13,8	13,8
H	5,95	7,25	9,75
H1	4,8	5	5,2
L	45	61	70
W	14	23	30
W1	6,8	10,8	10,8
Weight (g)	22	49	90
Package (pcs)	24	12	8

Distribution terminals MAG

Distribution terminals MAG 25 is designed to connect copper cables in the range of 2,5 to 25 mm².
Universal quick-mounting unit for horizontal and vertical mounting for 35 mm mounting rails. Contacts are made of MS 58, contact screws are made of zinc-plated steel. IP protection class for MAG 25 terminals is IP20.

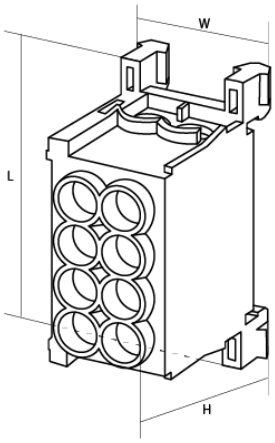

	MAG 25-2 grey	MAG 25-2 blue	MAG 25-2 green
Grey	MAG1250A32	-	-
Blue	-	MAG1250B32	-
Green	-	-	MAG1250G32

Technical data

Conductor cross-section CU (mm²)	4 x 2,5 - 25	4 x 2,5 - 25	4 x 2,5 - 25
Nominal voltage (V)	400	400	400
Nominal current (A)	80	80	80
Width / Length / Height (mm)	26 / 50,5 / 31,5	26 / 50,5 / 31,5	26 / 50,5 / 31,5
Screw	Pozidriv	Pozidriv	Pozidriv
Tightening torque (Nm)	2,5	2,5	2,5
Mounting	DIN rail	DIN rail	DIN rail
Weight (g)	60	60	60
Package (pcs)	4	4	4

Distribution blocks Moblock

Up to
160 A
50 mm²

Insulation
between
phases

Certified according
to standards
EN 60947-1
EN 60947-7-1

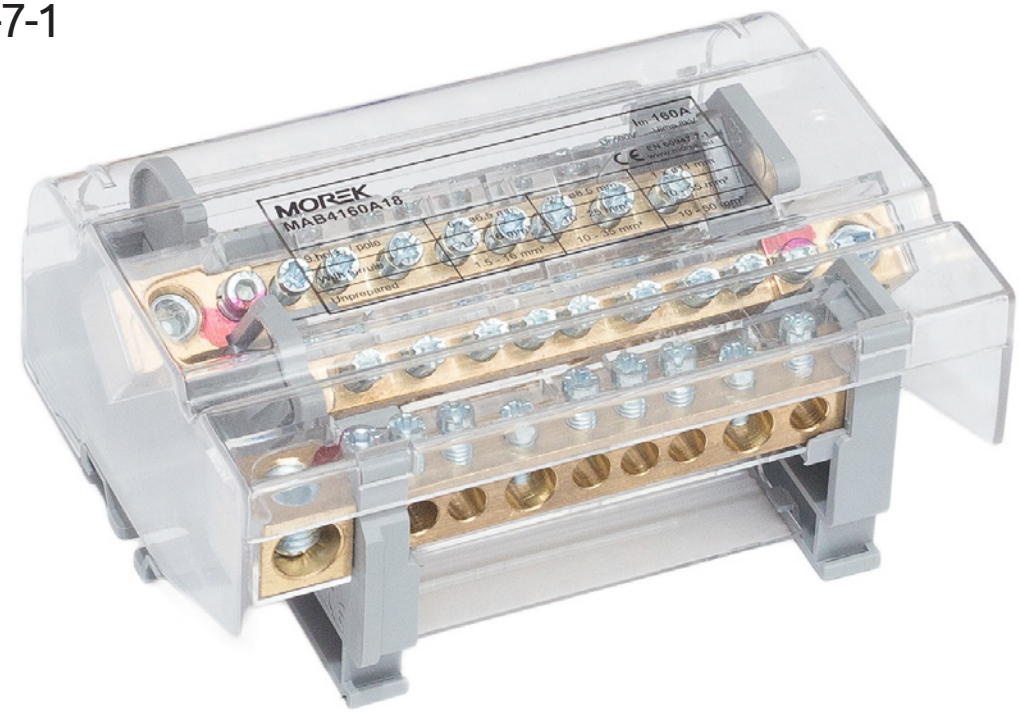

Two-pole distribution blocks

Distribution blocks Moblock are offered in two-pole (up to 35 mm² and 125A) and four-pole (up to 50 mm² and 160A) versions. Terminal blocks are placed on isolated brackets and are covered with easily removable transparent plastic cover. Terminal blocks are covered with a plastic part also from the bottom and between each busbar an insulating barrier is included.

Installation is possible on the DIN rail or panel using screws. Conductive part is made of brass, the connecting parts are made of steel, Zn galvanized.

For convenient and easy connection the 160A type input is separated on the busbar from the outputs. Massive 50 mm² endpoint on the busbar does not limit current capacity of the block and is set into the reinforced plastic housing.

Order code	Moblock 2P 100A-7	Moblock 2P 125A-11	Moblock 2P 125A-15
	MAB2100A18	MAB2125A18	MAB2126A18
Technical data			
Conductor cross section (per pole) Input wire CU (mm²) Output wire CU (mm²)	 2 x 10 - 25 5 x 1,5 - 6	 2 x 10 - 35 7 x 1,5 - 6 / 2 x 10 - 25	 2 x 10 - 35 11 x 1,5 - 6 / 2 x 10 - 25
Nominal voltage AC / DC (V)	1000	1000	1000
Nominal current (A)	100	125	125
Width / Height / Length (mm)	49 / 52 / 72	49 / 52 / 109	49 / 52 / 137
Short-circuit current peak Ipk (kA)	20	19	19
Short-circuit resistance (kA / 1s)	3	4,2	4,2
Rated surge voltage (kV)	8	8	8
Min. length of insulated wire (mm)	13	13	13
Tightening torque (Nm)	2,5	2,5	2,5
Mounting	DIN rail, screw	DIN rail, screw	DIN rail, screw
Weight (g)	95	150	200
Package (pcs)	4	2	2

Dimensions

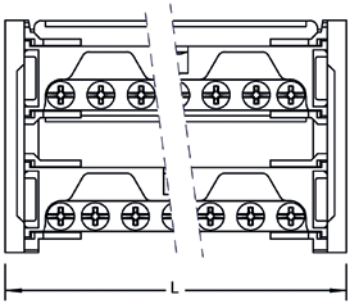

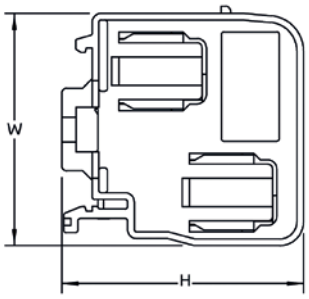

Order code	Moblock 4P 100A-7	Moblock 4P 125A-11	Moblock 4P 125A-15	Moblock 4P 160A-9	Moblock 4P 160A-14
	MAB4100A18	MAB4125A18	MAB4126A18	MAB4160A18	MAB4161A18
Technical data					
Conductor cross section (per pole) Input wire CU (mm²) Output wire CU (mm²)	 2 x 10 - 25 5 x 1,5 - 6	 2 x 10 - 35 7 x 1,5 - 6 / 2 x 10 - 25	 2 x 10 - 35 11 x 1,5 - 6 / 2 x 10 - 25	 1 x 10 - 50 6 x 1,5 - 16 / 2 x 10 - 35	 1 x 10 - 50 9 x 1,5 - 16 / 4 x 10 - 35
Nominal voltage AC / DC (V)	500	500	500	500	500
Nominal current (A)	100	125	125	160	160
Width / Height / Length (mm)	97 / 52 / 71	97 / 52 / 108	97 / 52 / 137	99 / 54 / 131	99 / 54 / 181
Short-circuit current peak Ipk (kA)	20	19	19	28	28
Short-circuit resistance (kA/1s)	3	4,2	4,2	6	6
Rated surge voltage (kV)	8	8	8	8	8
Min. length of insulated wire (mm)	13	13	13	13	13
Tightening torque (Nm)	2,5	2,5	2,5	2,5 (input wire 10 Nm)	2,5 (input wire 10 Nm)
Mounting	DIN rail, screw	DIN rail, screw	DIN rail, screw	DIN rail, screw	DIN rail, screw
Weight (g)	190	294	395	574	789
Package (pcs)	2	1	1	1	1

Dimensions

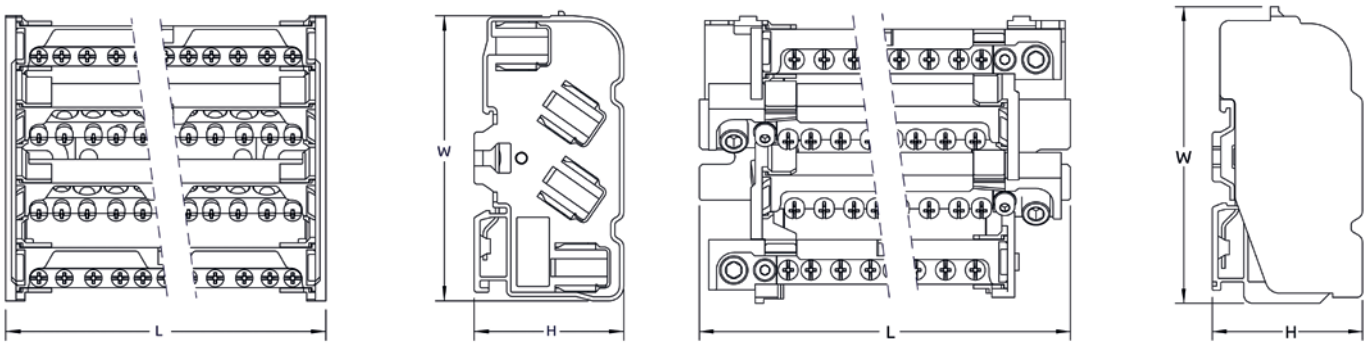

TN-C system (PEN) can be split at the TN-S (PE+N) when removing the connectors. Components of the connectors are made of aluminium and galvanized by Sn. Terminal is designed for the use of both copper and aluminium conductors.

All connectors are equipped with two terminals management test. The connectors can be mounted using screws on a flat solid surface.

	OT-PEN 50	OT-PEN 95	OT-PEN 120	OT-PEN 150	OT-PEN 240
	MAB3050S10	MAB3095S10	MAB3120S10	MAB3150S10	MAB3240S10
Technical data					
Conductor cross-section CU, AL (mm²)	1,5 - 50	6 - 95	16 - 120	25 - 150	35 - 240
Nominal voltage (V)	690	690	690	690	690
Width / Height / Length (mm)	44 / 57 / 83	64 / 80 / 83	64 / 87 / 120	64 / 91 / 120	64 / 101,6 / 134,90
Dimensions L1 / L2 / W1 / AV / D (mm)	60 / 76 / 5,25 / 5 / 4	63,5 / 76 / 5,25 / 6 / 4	81,5 / 104 / 21 / 6 / 6	82 / 104 / 21 / 6 / 6	104,5 / 119 / 21 / 8 / 6
Screw, hexagonal key	No. 5	No. 6	No. 6	No. 6	No. 8
Tightening torque (Nm)	1,5 Nm (1,5 - 2,5 mm²) 5 Nm (4 - 16 mm²) 10 Nm (25 - 50 mm²)	5 Nm (6 - 16 mm²) 22 Nm (25 - 95 mm²)	5 Nm (16 mm²) 26 Nm (25 - 120 mm²)	14 Nm (25 - 50 mm²) 30 Nm (70 - 150 mm²)	26 Nm (35 - 120 mm²) 40 Nm (150 - 240 mm²)
Mounting	Screw	Screw	Screw	Screw	Screw
Weight (g)	174	356	573	605	813
Package (pcs)	9	9	5	5	5

Dimensions

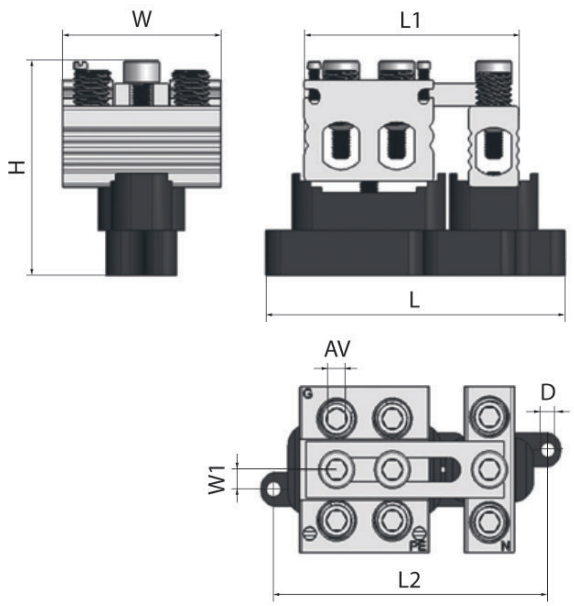

5 pole terminal plate

5 pole terminal plate is designed to connect copper cables in the range of 2,5 to 16 mm². Feed-through wires can be placed into the terminal without cutting the conductor. Branching wires can be connected additionally to the feed-through wire.

The terminal is equipped with galvanized steel bracket with screws, which can be tightened by a hexagonal key. These brackets can be easily removed for quick insertion of feed-through wires, but they are locked against falling out of the terminals.

The insulating part is made of polyamide PA6, grey color (RAL 7035). Product is equipped with fastening snaps for insulating cover (available separately). Terminal plate can be mounted on DIN rail or with screws on a flat solid surface.

	MAB 16x5
	MAB5016A10
Technical data	
Conductor cross-section CU (mm²)	5 x 2,5 - 16
Nominal voltage (V)	690
Nominal current (A)	124
Width / Height / Length (mm)	46 / 50 / 101
Screw, hexagonal key	No. 4
Tightening torque (Nm)	3 Nm (2,5 - 6 mm²) 5 Nm (10 - 16 mm²)
Mounting	DIN rail, screw
Weight (g)	145
Package (pcs)	50

Max. number of conductors per one connection point

Wire	Max. number of wires	Tightening torque
Cu 2.5 mm²	8 pcs	3 Nm
Cu 4 mm²	6 pcs	3 Nm
Cu 6 mm²	6 pcs	3 Nm
Cu 10 mm²	4 pcs	5 Nm
Cu 16 mm²	2 pcs	5 Nm

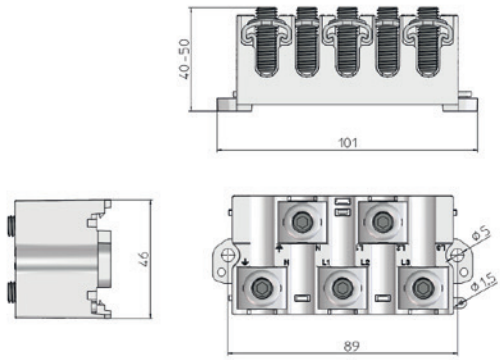

Terminal plate cover (IP20)

Insulating cover for terminal plate (IP20). Cover can be sealed on to terminal plate.

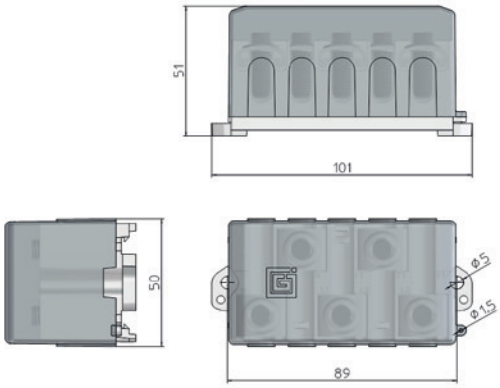

	MAB 16x5 Cover
	MAB5017A10
Technical data	
Width / Height / Length (mm)	50 / 43 / 89
Weight (g)	18
Package (pcs)	50

Electric main branch terminals

The universal quick-mounting device ensures that Electric main branch terminals can be fitted horizontally and vertically on 35 mm EN50022 mounting rails without the need to change any ftitting parts. If the terminals are mounted vertically, the contact slides are secured against dropping out when the screws are removed.

Terminals can be clipped onto 35 mm EN50022 mounting rails with additional latching by means of an eccentric bolt. Can be screwed onto even surfaces without any modifications.

One-pole




	MAF 25 1P-2	MAF 25 1P-4	MAF 35 1P-2	MAF 35 1P-4
Light Grey RAL7035	MAF1252A32	MAF1254A32	MAF1352A32	MAF1354A32

Technical data

Conductor cross-section (per pole) Input wire (mm²) Output wire (mm²)	1 x 10 - 25 2 x 6 - 16	1 x 10 - 25 4 x 6 - 16	1 x 16 - 35 2 x 10 - 25	1 x 16 - 35 4 x 10 - 25
Nominal voltage (V)	400	400	400	400
Nominal current (A)	80	80	100	100
Width / Height / Length (mm)	35 / 55,5 / 41,5	35 / 55,5 / 41,5	35 / 55,5 / 41,5	35 / 55,5 / 41,5
Screw	Eccentric screw	Eccentric screw	Eccentric screw	Eccentric screw
Tightening torque (Nm)	2,5	2,5	2,5 / 3,5	2,5 / 3,5
Mounting	DIN rail	DIN rail	DIN rail	DIN rail
Weight (g)	69	97	95	270
Package (pcs)	4	4	4	4

Four-pole




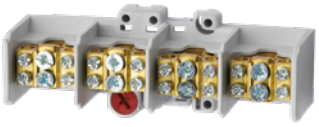

	MAF 25 4P-2	MAF 25 4P-4	MAF 35 4P-2	MAF 35 4P-4
Light Grey RAL7035	MAF4252A32	MAF4254A32	MAF4352A32	MAF4354A32

Technical data

Conductor cross-section (per pole) Input wire (mm²) Output wire (mm²)	1 x 10 - 25 2 x 6 - 16	1 x 10 - 25 4 x 6 - 16	1 x 16 - 35 2 x 10 - 25	1 x 16 - 35 4 x 10 - 25
Nominal voltage (V)	400	400	400	400
Nominal current (A)	80	80	100	100
Width / Height / Length (mm)	125 / 55,5 / 41,5	125 / 55,5 / 41,5	148,5 / 55,5 / 46,5	148,5 / 55,5 / 46,5
Screw	Eccentric screw	Eccentric screw	Eccentric screw	Eccentric screw
Tightening torque (Nm)	2,5	2,5	2,5 / 3,5	2,5 / 3,5
Mounting	DIN rail	DIN rail	DIN rail	DIN rail
Weight (g)	250	352	344	491
Package (pcs)	1	1	1	1

Five-pole

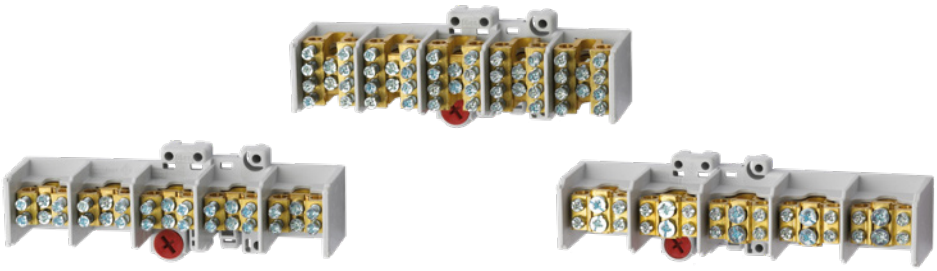

	MAF 25 5P-2	MAF 25 5P-4	MAF 35 5P-2
Light Grey RAL7035	MAF5252A32	MAF5254A32	MAF5352A32

Technical data

Conductor cross-section (per pole) Input wire (mm²) Output wire (mm²)	 1 x 10 - 25 2 x 6 -16	 1 x 10 - 25 4 x 6 - 16	 1 x 16 - 35 2 x 10 - 25
Nominal voltage (V)	400	400	400
Nominal current (A)	80	80	100
Width / Height / Length (mm)	155 / 55,5 / 41,5	155 / 55,5 / 41,5	184,5 / 55,5 / 46,5
Screw	Eccentric screw	Eccentric screw	Eccentric screw
Tightening torque (Nm)	2,5	2,5	2,5 / 3,5
Mounting	DIN rail	DIN rail	DIN rail
Weight (g)	293	437	420
Package (pcs)	1	1	1

Terminal covers

Insulating cover for branching terminals.

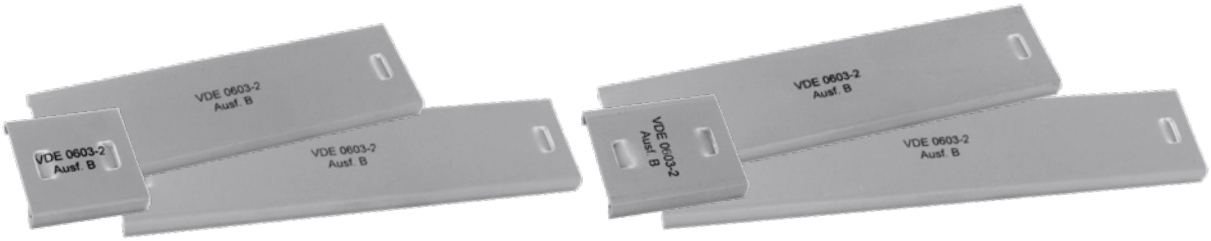

	MAF Cover 1P25	MAF Cover 4P25	MAF Cover 5P25	MAF Cover 1P35	MAF Cover 4P35	MAF Cover 5P35
Light Grey RAL7035	MAF1025A32	MAF4025A32	MAF5025A32	MAF1035A32	MAF4035A32	MAF5035A32

Technical data

Suitable with	Branch terminals 25mm²			Branch terminals 35mm²		
Poles	1	4	5	1	4	5
Material	Rigid PVC	Rigid PVC	Rigid PVC	Rigid PVC	Rigid PVC	Rigid PVC
Weight (g)	3	11	14	4	14	17
Package (pcs)	1	1	1	1	1	1

Branching blocks are designed to be used when connecting and branching copper cables. All models can be mounted on DIN rail or with screws.

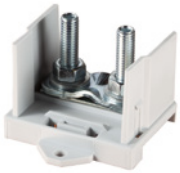

	MAB 120	MAB 70	MAB 70-2	MAB 150
	MAB1280A10	MAB1270S10	MAB2270S10	MAB1400S10
Technical data				
Conductor cross-section (mm²)	CU 2x(2-120)	CU 2x(6-70)	CU 2x(6 - 70) + bracket 2x(2,5 - 70)	CU 2x(35 - 150)
Nominal voltage AC / DC (V)	690	750	750	750
Nominal current (A)	280	270 (CU)	270 / 270 (CU)	400
Width / Height / Length (mm)	60 / 45 / 72	54 / 59 / 46	54 / 59 / 64	60 / 75 / 56
Mounting	Din rail, screw	DIN rail, screw	DIN rail, screw	Din rail, screw
Tightening torque (Nm)	5 Nm (2 - 10 mm²) 9 Nm (16 - 120 mm²)	2 Nm (2,5 - 70 mm²)	2 Nm (2,5 - 70 mm²) 3 Nm (6 - 70 mm²)	15 Nm (35 - 150 mm²)
Weight (g)	97	100	145	175
Package	30	15	15	15

	MAB 150-2	MAB 240	MAB 240-2
	MAB2320S10	MAB1560S10	MAB2560S10
Technical data			
Conductor (mm²)	CU 2x(35 - 150) + bracket 2x(16 - 150)	CU 2x(35 - 240)	CU 2x(35 - 240) + bracket 2x(16 - 185)
Nominal voltage AC / DC (V)	750	750	750
Nominal current (A)	320	560 (CU)	560 / 365 (CU)
Width / Height / Length (mm)	60 / 75 / 84	70 / 84 / 56	70 / 76 / 85
Mounting	Din rail, screw	Din rail, screw	Din rail, screw
Tightening torque (Nm)	15 Nm (16 - 150 mm²)	12 Nm (35 - 240 mm²)	12 Nm (35 - 240 mm²) 12 Nm (16 - 185 mm²)
Weight (g)	290	250	365
Package	10	15	10

Copper plates

Plates are made of copper. Copper plates are used between conductors when connecting several different sizes of wires to branching block.

	CU-plate 6-17	CU-plate 35-240
	MAB0270E10	MAB0560E10
Technical data		
Compatibility	MAB2270S10 and MAB1270S10	MAB1560S10 and MAB2560S10
Weight (g)	6	13
Package (pcs)	100	100

Side covers

Side covers are made of plastic. Covers are used to protect wires and insulate phases from each other.

	Side cover 6-17	Side cover 35-240
	MAB0270S10	MAB0560S10
Technical data		
Compatibility	MAB2270S10 and MAB1270S10	MAB1560S10 and MAB2560S10
Weight (g)	13	30
Package (pcs)	100	100

Device connectors SR

Direct connection
to the device

Bimetal (AL/CU)

Class A

Certified according to standards EN 61238-1 and EN 60947-7-1

Device connectors SR are designed to reduce of connection cross-sections CU and AL conductors for circuit breakers, controls and other devices. According to the Dimensions of the connection openings and equipment supply wire gauge can choose the appropriate corresponding reduction clamp. The clamp and the tightening screw are made of tin and aluminium insulating part is of fire-retardant polyamide.

Device connectors SR are designed to connect aluminium and copper cables directly to the device. The material of the body and tightening screws is aluminium with tin plating. Plastic cover is made of self-extinguishing polyamide. IP protection class for SR terminals is IP20.

	SR 50	SR 50M	SR 2x50RB	SR 95	SR 95M
Left handed	MAC1055A10	MAC1053A10	-	MAC9506A10	MAC9508A10
Standard	MAC1050A10	MAC1051A10	MAC2050A10	MAC9500A10	MAC9501A10
Right handed	MAC1054A10	MAC1052A10	-	MAC9507A10	MAC9509A10

Technical data

Conductor cross-section CU, AL (mm²)	6 - 50	6 - 50	2 x 6 - 50	16 - 95	16 - 95
Measurement wire	-	2,5	-	.	2,5
Nominal voltage AC / DC (V)	690	690	690	690	690
Nominal current CU / AL (A)	160 / 100	160 / 100	320 / 250	230 / 180	230 / 180
Width / Height / Length (mm)	17 / 32 / 49,8	17 / 32 / 49,8	22,4 / 41,2 / 71,8	23,4 / 51 / 67,8	23,4 / 51 / 67,8
Dimensions L1 / H1 / H2 / W1 (mm)	14,6 / 5 / 10 / 6	14,6 / 5 / 10 / 6	27,3 / 11,4 / 10,3 / 11,8	26,6 / 9 / 3,5 / 10	26,6 / 9 / 3,5 / 10
Screw, hexagonal key	No. 5	No. 5	No. 5	No. 6	No. 6
Tightening torque (Nm)	6 Nm (6 - 10 mm²) 10 Nm (16 - 50 mm²)	6 Nm (6 - 10 mm²) 10 Nm (16 - 50 mm²)	6 Nm (6 - 10 mm²) 10 Nm (16 - 50 mm²)	12 Nm (16 - 50 mm²) 20 Nm (70 - 95 mm²)	12 Nm (16 - 50 mm²) 20 Nm (70 - 95 mm²)
Weight (g)	22,8	23,2	26,2	56	56
Package (pcs)	50	50	30	30	30

Model specification (marking) **M** - model has connector for measurement I **RB** - rounded busbar

SR 50(M)

Right handed Standard Left handed

SR 95(M)

Right handed Standard Left handed

Dimensions

SR 50(M)

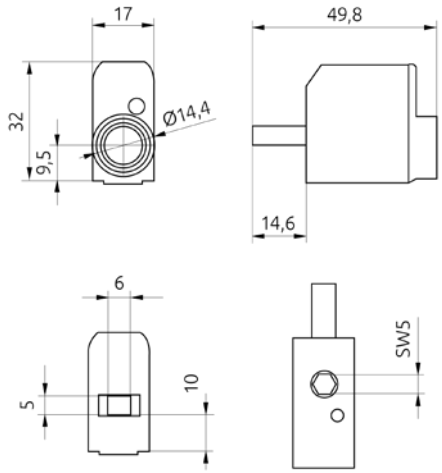

SR 2x50RB

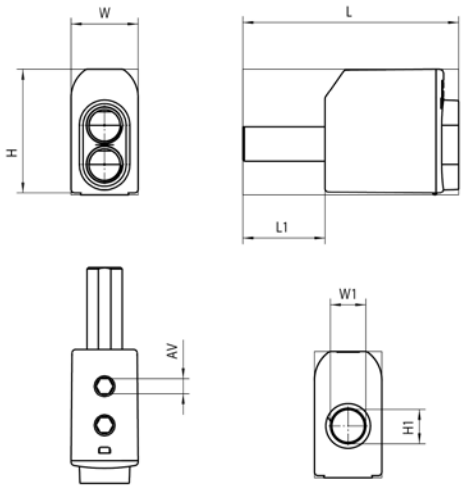

SR 95(M)

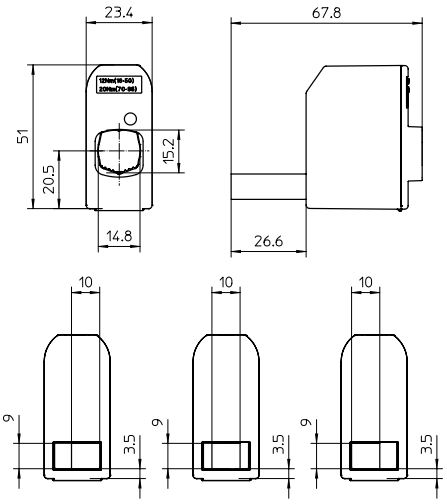

	SR 95SB	SR 95SBM	SR 95RB	SR 95RBM
Left handed	-	-	MAC9510A10	MAC9513A10
Standard	MAC9505A10	MAC9503A10	MAC9504A10	MAC9502A10
Right handed	-	-	MAC9511A10	MAC9512A10
Technical data				
Conductor cross-section CU, AL (mm²)	16 - 95	16 - 95	16 - 95	16 - 95
Measurement wire	-	2,5	-	2,5
Nominal voltage AC / DC (V)	690	690	690	690
Nominal current CU / AL (A)	230 / 180	230 / 180	230 / 180	230 / 180
Width / Height / Length (mm)	23,4 / 51 / 67,8	23,4 / 51 / 67,8	23,4 / 51 / 67,8	23,4 / 51 / 67,8
Dimensions L1 / H1 / H2 / W1 (mm)	26,6 / 9 / 3,5 / 16	26,6 / 9 / 3,5 / 16	16,6 / 9 / 3,5 / 10	16,6 / 9 / 3,5 / 10
Screw, hexagonal key	No. 6	No. 6	No. 6	No. 6
Tightening torque (Nm)	12 Nm (16 - 50 mm²) 20 Nm (70 - 95 mm²)	12 Nm (16 - 50 mm²) 20 Nm (70 - 95 mm²)	12 Nm (16 - 50 mm²) 20 Nm (70 - 95 mm²)	12 Nm (16 - 50 mm²) 20 Nm (70 - 95 mm²)
Weight (g)	58	58	56 / 58	56 / 58
Package (pcs)	30	30	30	30

Model specification (marking) **M** - model has connector for measurement I **RB** - rounded busbar

SR 95RB(M)

Right handed Standard Left handed

Dimensions

SR 95SB(M)

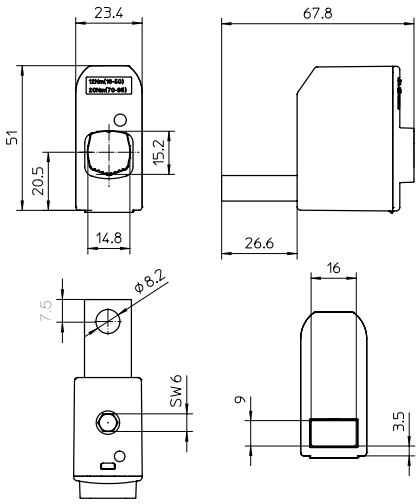

SR 95RB(M)

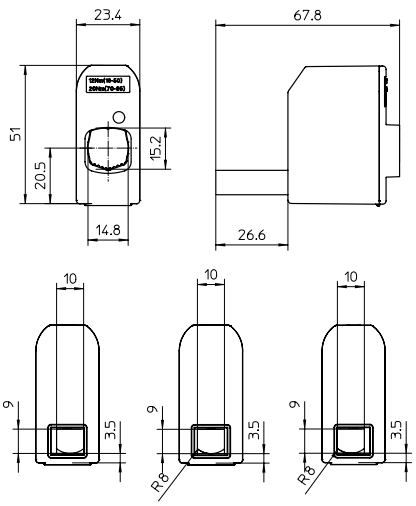

Heavy duty connectors OL

Up to
800 A
2x300 mm²

Bimetal (AL/CU)

Made of
stainless steel
– suitable in harsh environments

Heavy duty connectors OL

Heavy duty connectors OL are intended for connecting copper and aluminium conductors in nominal cross-section from 6 to 2 x 300 mm². Heavy duty connectors OL are designed for connecting one or two conductors. Individual parts of terminals are made of stainless steel (clamp), copper (bridge) and steel (screw).

These connectors are heavy duty. Clamping them with stranded conductors does not require modification of wire ends (clamping surface of terminal, not flat screw spot). The installation can be performed without use of special tools.






	OL 70	OL 70M	OL 70T	OL 95	OL 95T	OL 150
	MAJ1070E10	MAJ1071E10	MAJ1072E10	MAJ1095E10	MAJ1096E10	MAJ1150E10
Technical data						
Conductor cross-section CU, AL (mm²)	6 - 70	6 - 70	6 - 70	25 - 95	25 - 95	25 - 150
Nominal voltage (V)	690	690	690	690	690	690
Nominal current CU / AL (A)	270 / 270	270 / 270	270 / 270	320 / 320	320 / 320	285 / 230
Width / Height / Length W1 / L1 (mm)	16,2 / 30 / 37	16,2 / 23 / 37	16,2 / 30 / 38 10 / 17	18 / 33 / 50 /	18 / 33 / 50 10 / 20	23 / 38 / 60
Diameter of the hole (mm) AV / AV1	7 / 7,5	7 / 7,5	-	9 / 10	-	11 / 13,5
Screw, hexagonal key	No. 4	No. 4	No. 4	No. 4	No. 4	No. 4
Tightening torque (Nm)	5,6	5,6	5,6	20	20	30
Weight (g)	44	36	44	76	69	130
Package (pcs)	30	30	30	15	15	15






	OL 185	OL 240M	OL 300	OL 150-2	OL 240-2	OL 300-2
	MAJ1185E10	MAJ1240E10	MAJ1300E10	MAJ2150E10	MAJ2240E10	MAJ2300E10
Technical data						
Conductor cross-section CU, AL (mm²)	95 - 185	95 - 240	185 - 300	2 x 50 - 150	2 x 95 - 240	2 x 185 - 300
Nominal voltage (V)	690	690	690	690	690	690
Nominal current CU / AL (A)	400 / 400	400 / 400	560 / 560	579 / 455	806 / 631	800 / 800
Width / Height / Length	24 / 40 / 66	26,3 / 40 / 61	32 / 52 / 76	25 / 64 / 59	30 / 78 / 60	38 / 91 / 85
Diameter of the hole (mm) AV / AV1	11 / 12	11 / 12	13 / 17	11 / 12	11 / 13	13 / 20
Screw, hexagonal key	No. 5	No. 5	No. 5	No. 5	No. 6	No. 6
Tightening torque (Nm)	40	40	70	40	70	70
Weight (g)	142	140	287	240	345	544
Package (pcs)	15	15	3	3	3	3

Dimensions

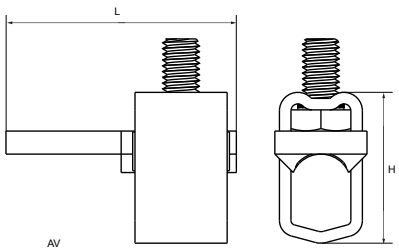

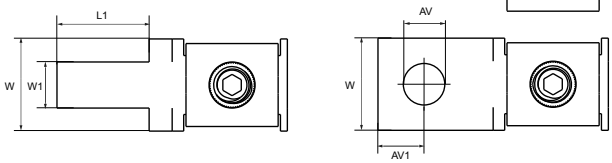

Insulated universal connectors OLI

Insulated universal connectors OLI are intended for connecting copper and aluminium conductors in nominal cross-section from 6 to 300 mm². Connectors are designed for connecting copper or aluminium cables with flexibars or with cables with lug. Individual parts are made of stainless steel (clamp), copper (bridge), steel (screw) and plastic (housing). These connectors are heavy duty. Clamping them with stranded conductors does not require modification of wire ends (clamping surface of terminal, not flat screw spot). IP protection class for OLI terminals is IP20.

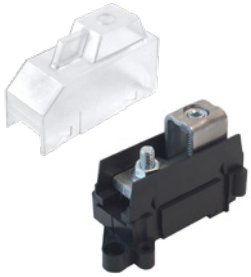

OLI 95

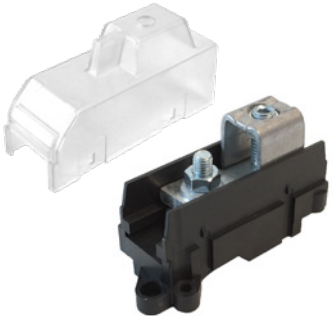

OLI 185

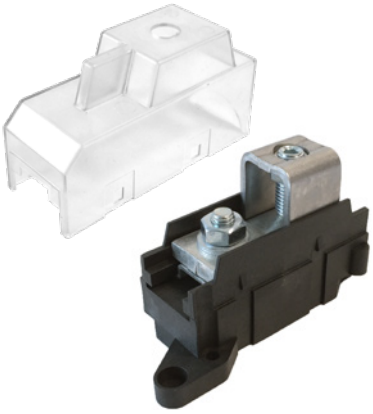

OLI 300

	MAJ1095S10	MAJ1185S10	MAJ1300S10
Technical data			
Conductor cross-section CU / AL (mm²)	25 - 95	95 - 185	185 - 300
Nominal voltage (V)	690	690	690
Nominal current (A)	320	400	560
Width / Height / Length (mm) L1 / W1 / W2	40 / 60 / 87 55 / 16,6 / 20	49 / 67 / 113 76,9 / 21,4 / 25	57 / 88 / 143 86,5 / 25 / 32
Screw, hexagonal key (AV)	SW 4	SW 5	SW 6
Tightening torque (Nm)	20	40	70
Mounting	Din rail, screw	Din rail, screw	Din rail, screw
Weight (g)	119	237	444
Package (pcs)	12	10	8

Dimensions

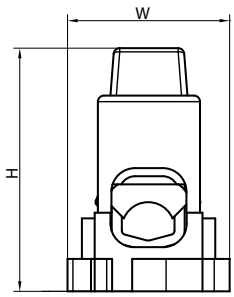

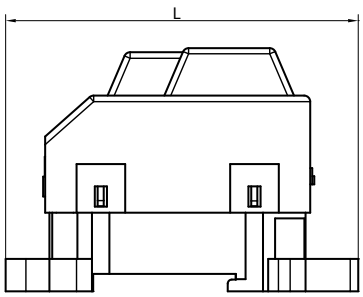

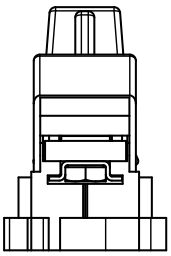

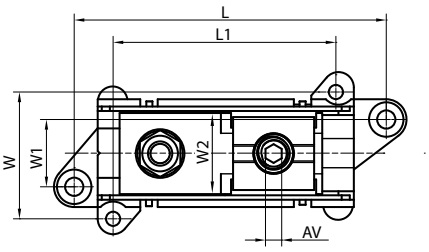

Universal connectors OT

Universal connectors OT are used to connect copper and aluminium conductors to the busbar. Connectors enable to connect one or two conductors. The clamp body and tightening screws are made of a special aluminium alloy and galvanized by Sn.

Screw contact surfaces are coated with the contact paste for better conductivity. The contact surface is provided with grooves, which avoid loosening the wire.

	OT 50	OT 95	OT 120
	MAC1050E10	MAC1095E10	MAC1120E10
Technical data			
Conductor cross-section CU, AL (mm²)	1,5 - 50	6 - 95	16 - 120
Nominal voltage (V)	690	690	690
Nominal current CU / AL (A)	160 / 145	245 / 220	280 / 230
Width / Height / Length (mm)	14 / 21,5 / 35	20 / 30 / 46	25 / 35 / 64
Diameter of the hole (mm) AV / AV1	8,5 / 10,5	10,5 / 13	12,5 / 17
Screw, hexagonal key	No. 5	No. 6	No. 6
Tightening torque (Nm)	3,5 Nm (1,5 - 10 mm²) 12 Nm (16 - 50 mm²)	12 Nm (16 - 35 mm²) 22 Nm (50 - 95 mm²)	12 Nm (6 - 35 mm²) 25 Nm (50 - 120 mm²)
Weight (g)	10	22	50
Package (pcs)	30	30	30

	OT 150	OT 240	OT 300
	MAC1150E10	MAC1240E10	MAC1300E10
Technical data			
Conductor cross-section CU, AL (mm²)	25 - 150	35 - 240	95 - 300
Nominal voltage (V)	690	690	690
Nominal current CU / AL (A)	320 / 290	425 / 380	490 / 420
Width / Height / Length (mm)	26 / 39 / 62	32 / 44 / 74	40 / 48 / 64
Diameter of the hole (mm) AV / AV1	12,5 / 15	12,5 / 15	12,5 / 18
Screw, hexagonal key	No. 6	No. 8	No. 8
Tightening torque (Nm)	14 Nm (25 - 150 mm²) 30 Nm (70 - 150 mm²)	26 Nm (35 - 120 mm²) 40 Nm (150 - 240 mm²)	33 Nm (95 - 185 mm²) 60 Nm (240 - 300 mm²)
Weight (g)	58	115	134
Package (pcs)	20	10	10

Dimensions

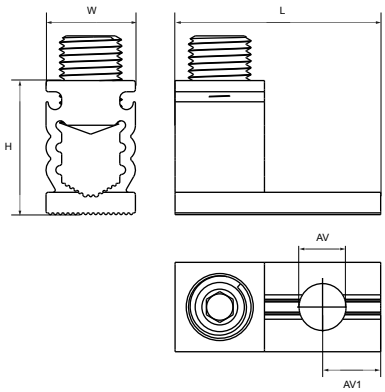

Universal connectors OTH

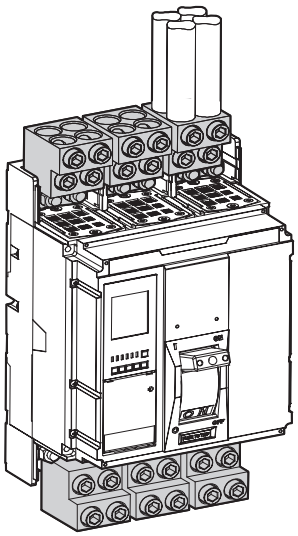

Universal connectors OTH are used to connect copper and aluminium wires to devices. Device connectors enable to connect three or four wires up to 240 mm². Their compact economic design is characterized by small size and easy installation.

	OTH 240-3	OTH 240-4
	MAC3240A14	MAC4240A14
Technical data		
Conductor cross-section CU, AL (mm²)	3 x 85 - 240	4 x 85 - 240
Nominal current (A)	800	1250
Width / Height / Length (mm)	50 / 63 / 82	54 / 63 / 86
Number of mounting holes	1	2
Diameter connecting hole (mm)	12,5	10,5
Screw, hexagonal key	9,5 mm	9,5 mm
The length of the insulated conductor (mm)	25 - 48	25 - 55
Tightening torque (Nm)	42	55
Weight (g)	310	344
Package (pcs)	3	3

Dimensions

OTH 240-3

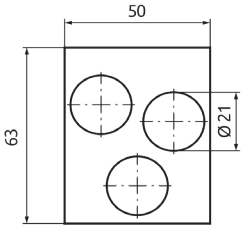

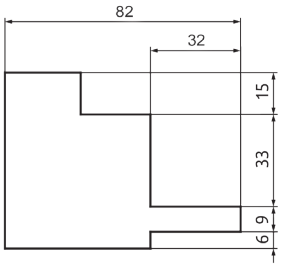

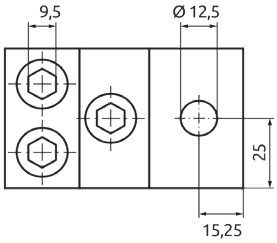

OTH 240-4

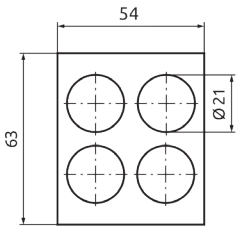

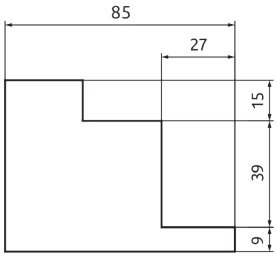

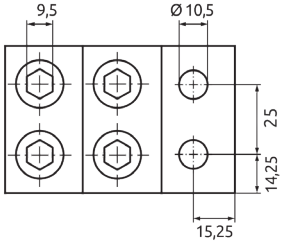

Terminals BB (16 mm²)

Terminals BB solution is the best for these customers who would like to prepare the suitable length of the sets with plastic holders BB1 and BB0 by themselves. The conductive part is made of brass, the connecting parts are made of steel, Zn galvanized.

Technical specifications

- Conductor cross section CU (mm²) - 1,5 - 16
- Nominal voltage (V) - 690
- Nominal current (A) - 63
- Tightening torque (Nm) - 2,5

Order code	Type	Number of connections	Dimensions (mm) W / H / L	Weight (g)	Package (pcs)
MAD0007E21	BB 7	7	6,5 / 9 / 47	22	100
MAD0009E21	BB 9	9	6,5 / 9 / 61	28	70
MAD0014E21	BB 14	14	6,5 / 9 / 94	42	50
MAD0024E21	BB 24	24	6,5 / 9 / 160	72	30
MAD0032E21	BB 32	32	6,5 / 9 / 213	96	20
MAD0042E21	BB 42	42	6,5 / 9 / 279	123	20
MAD0052E21	BB 52	52	6,5 / 9 / 345	152	20
MAD0147E21	BB 147	147	6,5 / 9 / 972	444	30
* MAD0142E21	BB 142	142	8 / 10 / 1000	582	25

** Only compatible with the BB0 holder*

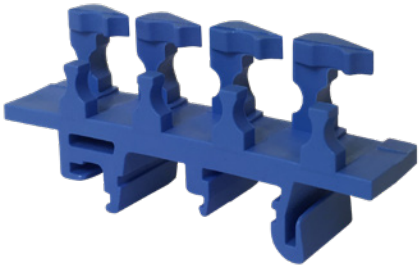

NPE busbar plastic holders BB1 are used for mounting BB brass bar terminals on DIN rails. Thanks to innovative design it is easy to place or replace brass bar terminals in accordance to your own needs. It gives you flexibility to create wide range of IP00 NPE terminals.
Holders are made of polyamide and offered in 3 colors.

Plastic holders BB0 are used for mounting 2 BB brass terminal on DIN rails. Holders are made of polyamide and offered in black color.

	BB1
Black ●	MAD0001B21
Blue ●	MAD0001N21
Green ●	MAD0001G21
Technical data	
Width / Height / Length (mm)	13 / 25 / 60
Mounting	Din rail
Weight (g)	6
Package (pcs)	50

	BB0
Black ●	MAD0000B21
Technical data	
Width / Height / Length (mm)	11 / 32 / 40
Mounting	DIN rail
Weight (g)	6
Package (pcs)	50

Terminals BB (25 mm²)

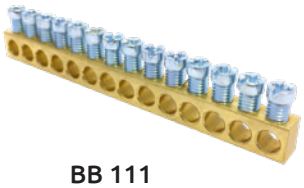

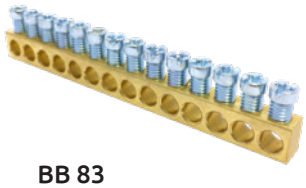

	BB 111	BB 83
	MAD0111E21	MAD0083E21
Technical data		
Number of connections	111	83
Conductor cross section CU (mm²)	1,5 - 25	1,5 - 35
Nominal voltage (V)	690	690
Nominal current (A)	100	160
Width / Height / Length (mm)	10 / 10 / 998	10 / 15 / 995
Weight (g)	625	1088
Package (pcs)	25	15

** BB 111 is only compatible with the BB3 holder*

Dimensions

BB 111

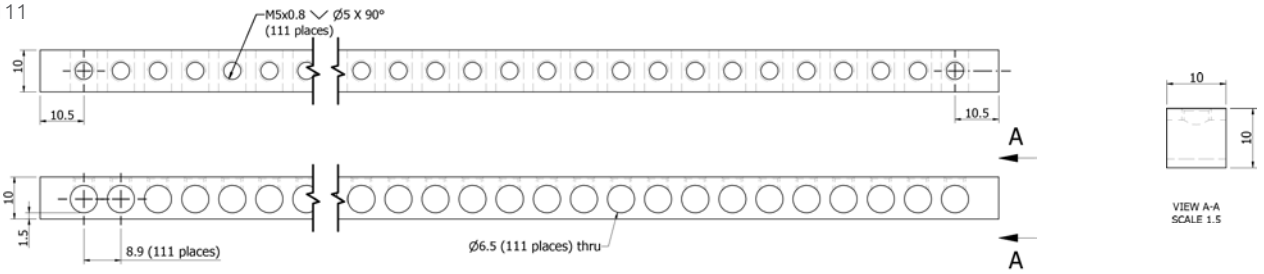

BB 83

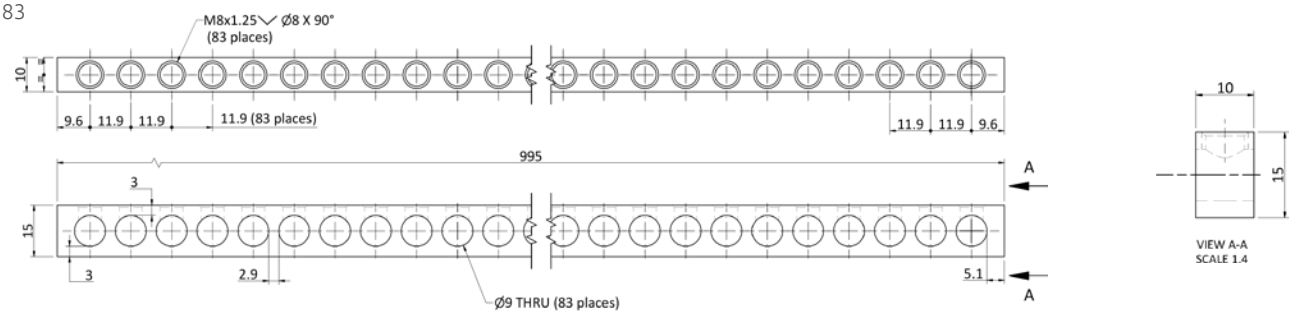

Terminal BB DIN-rail adapter

	BB 3
Black ●	MAD2003A21
Technical data	
Width / Height / Length (mm)	12 / 41,5 / 56
Mounting	Din rail
Weight (g)	8
Package (pcs)	50

** BB 3 is suitable only for BB 111 busbar*

Terminals MSET

Terminals MSET are ready-to-use solutions for the customers who would like to save their own production time.
The conductive part is made of brass, the connecting parts are made of steel, Zn galvanized.

Order code	Type	Number of connections	Dimensions (mm) W / H / L	Weight (g)	Package (pcs)
MAD2007B21	MSET 7	7x2	40 / 40 / 50	54	10
MAD2009B21	MSET 9	9x2	40 / 40 / 64	68	10
MAD2014B21	MSET 14	14x2	40 / 40 / 97	96	10
MAD2024B21	MSET 24	24x2	40 / 40 / 163	156	10
MAD2032B21	MSET 32	32x2	40 / 40 / 216	202	10
MAD2042B21	MSET 42	42x2	40 / 40 / 282	258	10
MAD2052B21	MSET 52	52x2	40 / 40 / 348	316	10

Technical data

Conductor cross section CU (mm2)	1,5 - 16
Nominal voltage (V)	690
Nominal current (A)	63
Tightening torque (Nm)	2,5
Mounting	DIN rail

Terminals MPIN

Terminals MPIN are the solution to increase the number of RCCB neutral terminals output connection points.
The conductive part is made of brass, the connecting parts are made of steel, Zn galvanized.

	MPIN 3	MPIN 6
	MAD3016E21	MAD6016E21
Technical data		
Conductor cross section CU (mm²)	16	16
Nominal voltage (V)	690	690
Nominal current (A)	63	63
The number of connection points	3 x 16	6 x 16
Width / Height / Length (mm)	8 / 16 / 35	16 / 16 / 33
Tightening torque (Nm)	2,5	2,5
Weight (g)	10	18
Package (pcs)	200	100

Dimensions

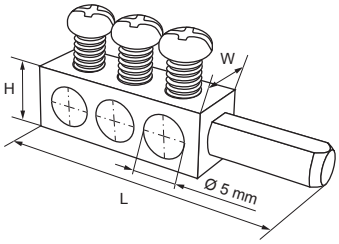

Terminals NPE (bridges) can be mounted on DIN rail crosswise. The bridges of the holders are made of highly thermally and mechanically resistant fire-retardant material. These bridges have IP00 and are intended for location under cover. They are offered in three color variations.

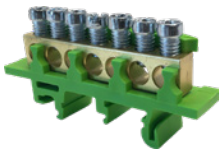
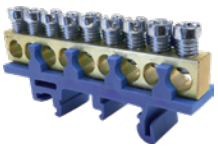


	A7, N7 , PE7	A9, N9 , PE9	A14, N14 , PE14
Black	MAD0007B00	MAD0009B00	MAD0014B00
Blue	MAD0007N00	MAD0009N00	MAD0014N00
Green	MAD0007G00	MAD0009G00	MAD0014G00
Technical data			
Conductor cross section CU (mm²)	1,5 - 16	1,5 - 16	1,5 - 16
Nominal voltage (V)	690	690	690
Nominal current (A)	63	63	63
The number of connection points	7	9	14
Tightening torque (Nm)	2,5	2,5	2,5
Width / Height / Length (mm)	13 / 30 / 60	13 / 30 / 61	13 / 30 / 94
Mounting	Din rail	Din rail	Din rail
Weight (g)	28	32	48
Package (pcs)	20	20	20

Terminals NPE (bridges) can be mounted on DIN rail crosswise. The bridges of the holders are made of highly thermally and mechanically resistant fire-retardant material. These bridges have IP20 prottection class. They are offered in three color variations.




	A7H, N7H , PE7H	A12H, N12H, PE12H	A15H, N15H, PE15H	A6H-2, N6H-2, PE6H-2
Grey	MAD1007A15	MAD1012A15	MAD1015A15	MAD2006A15
Blue	MAD1007N15	MAD1012N15	MAD1015N15	MAD2006N15
Green	MAD1007G15	MAD1012G15	MAD1015G15	MAD2006G15
Technical data				
Conductor cross section CU (mm²)	1,5 - 16	1,5 - 16	1,5 - 16	8 x 2,5 - 16 4 x 4 - 25
Nominal voltage (V)	690	690	690	500
Nominal current (A)	63	63	63	63
The number of connection points	7	12	15	2 x 6
Tightening torque (Nm)	2	2	2	2
Width / Height / Length (mm)	13 / 27 / 53	13 / 27 / 87	13 / 27 / 106	30 / 27 / 53
Mounting	DIN rail	DIN rail	DIN rail	DIN rail
Weight (g)	28	45	57	88
Package (pcs)	10	10	10	10

Modular N/PE busbars

MOREK

Modular N/PE-busbars are used in switchgears and other systems to ensure safe and reliable connection for neutral and safety grounding. Construction of busbar system is modular and allows a possibility to order special configurations according to clients needs.

Advantages

• Needed configuration is easily assembled with high quality components

NEW

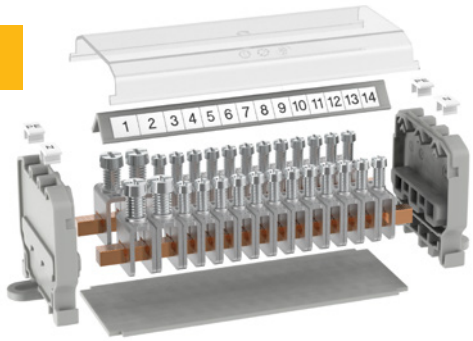

• Suitable for variety of conductors from 0,75 mm² to 35 mm²
• Suitable for variaety of copper busbars 5x5 mm; 6x6 mm; 3x10 mm
• Easy accesible for marking

Technical specifications

• Busbar Din-rail adapters are applicable with busbar sizes 5x5 mm; 6x6 mm; 3x10 mm and made of grey nylon
• Copper busbars come in different lenghts and have serrations to ensure best connection
• Modular connectors of nominal voltage of 600V for the conductors cross-sections from 0,75 to 35 mm²

Modular connectors



Mounting	MAM 6	MAM 16	MAM 35
5x5 mm bar	MAM5506E10	MAM5516E10	MAM5535E10
6x6 mm bar	MAM6606E10	MAM6616E10	MAM6635E10
Technical data			
Cross-section Cu, Al (mm²)	0,75 - 6	0,75 - 16	2,5 - 35
Nominal voltage AC / DC (V)	600	600	600
Nominal current (A)	33	82	135
Screw, hexagonal key (AV)	Pozidriv	Pozidriv	HEX
Tightening torque (Nm)	1,2	2,5	4
Weight (g) 5 x 5 mm bar 6 x 6 mm bar	 5 5	 7 8	 14 14
Package (pcs)	500	500	500

Copper busbars

Length (mm)	Package (pcs)	5x5 mm	6x6 mm	3x10 mm
59,3	50	MAM550060C	MAM660060C	MAM310060C
76,5	40	MAM550076C	MAM660076C	MAM310076C
105,7	40	MAM550106C	MAM660106C	MAM310106C
165,5	30	MAM550166C	MAM660166C	MAM310166C
225,5	20	MAM550226C	MAM660226C	MAM310226C
1000	10	MAM551000C	MAM661000C	MAM311000C

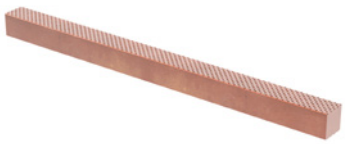

Busbar Din-rail adapters

Order code	Type (mm)	Weight (g)	Package (pcs)
MAM5500ABA	5x5	17	100
MAM6600ABA	6x6	18	100
MAM3100ABA	3x10	17	100

Marking supports

Order code	Length (mm)	Weight (g)	Package (pcs)
MAM0050AMS	50	1	25
MAM0067AMS	67	2	20
MAM0096AMS	97	3	20
MAM0156AMS	156	5	15
MAM0216AMS	216	7	10

Finger shields

Order code	Length (mm)	Weight (g)	Package (pcs)
MAM0054AFS	54	6	25
MAM0071AFS	71	8	20
MAM0100AFS	100	11	20
MAM0160AFS	160	18	15
MAM0220AFS	220	28	10

Marking labels

Order code	Type	Weight (g)	Package (pcs)
MAM0625LBL	No. 1 - 25 for MAM 6 connector	3	Qty by order
MAM0650LBL	No. 26 - 50 for MAM 6 connector	3	Qty by order
MAM1616LBL	No. 1 - 16 for MAM 16 connector	3	Qty by order
MAM1632LBL	No. 17 - 32 for MAM 16 connector	3	Qty by order
MAM3510LBL	No. 1 - 10 for MAM 35 connector	3	Qty by order

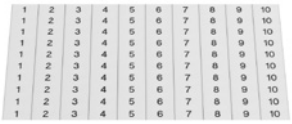

Dimensions

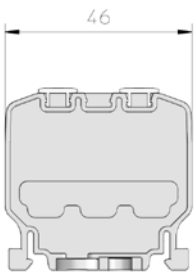

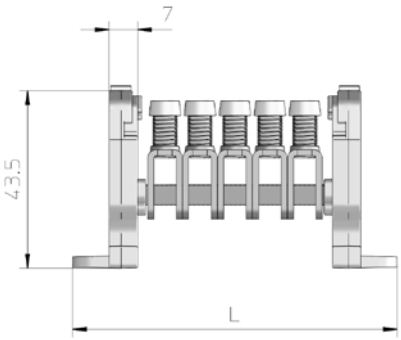

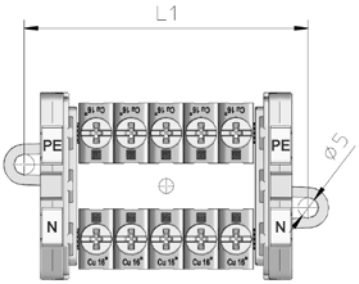

Bow terminals MAE-E

Bow terminals MAE-E are designed for mounting on copper busbar with thickness of 5 or 10 mm, enabling fastening wires up to 185 mm² according to different types or up to 10x20 mm Moflex flexibars. Body and screw of terminals are made of steel (class 11) and galvanized by Zn. The pressure spring is made of stainless steel. Hexagonal head in terminals (except MAE 16E) enables to tighten screws using hexagonal key with slotted blade or Phillips screwdriver.

Advantages

- Quick and easy installation
- Ideal for on site modifications
- Allows for excellent electrical contact
- Terminal has visible indication of tightening torque
- Suitable to connect wires up to185 mm² according to different types
- Suitable to connect up to 10x20 mm Moflex flexibars to copper busbar

Mounting	MAE 16E	MAE 35E	MAE 50E	MAE 70E	MAE 120E	MAE 185E
5 mm bar	MAE0165E15	MAE0355E15	MAE0505E15	MAE0705E15	MAE1205E15	MAE1855E15
10 mm bar	MAE0161E15	MAE0351E15	MAE0501E15	MAE0701E15	MAE1201E15	MAE1851E15
Technical data						
Cross-section CU (mm²)	1,5 - 16	4 - 35	10 - 50	16 - 70	16 - 120	50 - 185
Flexibar max. width (mm)	-	9	9	9	15,5	20
Flexibar max. layers	-	6	6	6	10	10
Nominal voltage AC/DC (V)	1000	1000	1000	1000	1000	1000
Nominal current (A)	180	270	315	400	440	500
Width / Height / Length (mm) Cu bar (th. 5 mm) Cu bar (th. 10 mm)	 25,5 / 26,5 / 12 25,5 / 29 /12	 26,5 / 31,3 / 16,5 26,5 / 36,5 / 16,5	 26,5 / 35 / 16,5 26,5 / 40 / 16,5	 28 / 39 / 20,5 28 / 46 / 20,5	 29 / 46 / 23,5 29 / 52 / 23,5	 29 / 55 / 35 29 / 55 / 35
Screw / hexagonal key (AV)	Pz2	Pz3 / SW13	Pz3 / SW13	Pz3 / SW13	Pz3 / SW17	Pz3 / SW17
Tightening torque (Nm)	3	6	8	8	20	20
Weight (g) Cu bar (th. 5 mm) Cu bar (th. 10 mm)	 22 21	 44 45	 48 48	 62 68	 88 90	 102 96
Package (pcs)	40	20	20	10	10	10

Dimensions

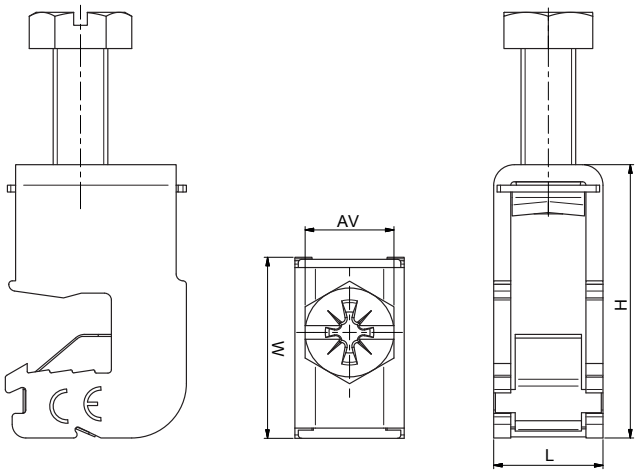

Bimetal bow terminals MAE-H

Bimetal bow terminals MAE-H are designed for mounting on copper or aluminium busbar with thickness of 5 or 10 mm, enabling fastening copper and aluminium wires up to 185 mm² or up to 10x20mm Moflex flexibars. Terminals have bimetal plate between busbar and cable connection. Body and screw of terminals are made of steel (class 11) and galvanized by Zn. The pressure spring is made of stainless steel and separating plate - of phosphorus bronze. Hexagonal head in terminals (except MAE 35H) enables to tighten screws using hexagonal key with slotted blade or Phillips screwdriver.

Advantages

- Quick and easy installation
- Ideal for on site modifications
- Allows for excellent electrical contact
- Terminal has visible indication of tightening torque
- Suitable to connect aluminium cable to copper busbar or copper cable to aluminium busbar without additional need for TIN plated busbars
- Suitable to connect Moflex copper flexibar to aluminium busbar without additional need for TIN plated busbars or flexibars




Mounting	MAE 35H	MAE 70H	MAE 120H	MAE 185H
5 mm bar	MAE0355H15	MAE0705H15	MAE1205H15	MAE1855H15
10 mm bar	MAE0351H15	MAE0701H15	MAE1201H15	MAE1851H15

Technical data				
Cross-section CU, AL (mm²)	4 - 35	16 - 70	16 - 120	50 - 185
Flexibar max. width (mm)	9	9	15,5	20
Flexibar max. layers	6	6	10	10
Nominal voltage AC/DC (V)	1000	1000	1000	1000
Nominal current (A)	270	400	440	500
Width / Height / Length (mm) 5 mm bar 10 mm bar	 26,5 / 32 / 16,5 26,5 / 37 / 16,5	 27,5 / 41 / 21 27,5 / 46 / 21	 29 / 46 / 24 29 / 51 / 24	 29 / 52 / 30 29 / 56 / 30
Screw / hexagonal key (AV)	Pz3 / SW13	Pz3 / SW13	Pz3 / SW17	Pz3 / SW17
Tightening torque (Nm)	6	12	22	22
Weight (g) 5 mm bar 10 mm bar	 44 45	 62 68	 88 90	 102 102
Package (pcs)	10	10	10	10

Dimensions

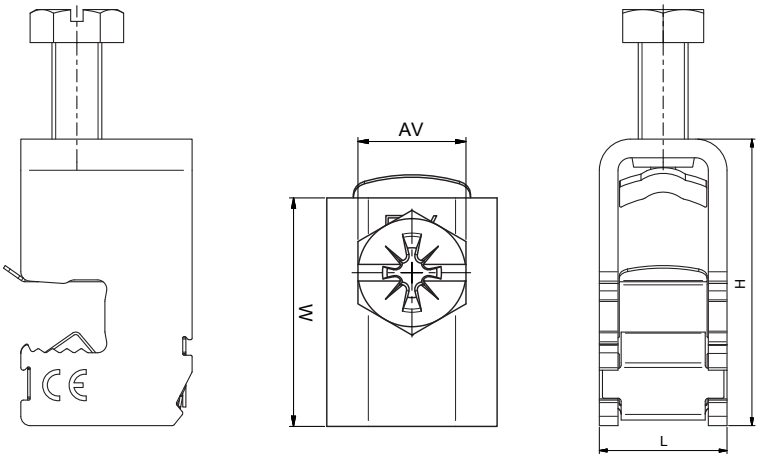

Bimetal bow terminals MAE 300H

Bimetal bow terminals MAE 300H are designed for mounting on copper or aluminium busbar with maximum Dimensions of 30 x 10 mm, enabling fastening copper and aluminium wires up to 300 mm².

Terminal has bimetal plate between busbar and cable connection. It is therefore suitable to connect aluminium cable to copper or copper to aluminium busbar without additional need for TIN plated busbars.

Terminal has visible indication of tightening torque and cross-section connection.

Insertion of the terminal should be made at an angle of 45°.

NEW

Mounting	MAE 300H
Max. 30 x 10 mm AL or CU busbar	MAE3001H15

Technical data	
Conductor cross-section CU (mm²) Conductor cross-section AL (mm²)	95 - 300 120 - 300
Nominal voltage AC/DC (V)	1000
Nominal current (A)	630
Width / Height / Length (mm)	57 / 76,6 / 38
Screw, hexagonal key (AV)	No. 8
Tightening torque (Nm)	30
Weight (g)	454
Package (pcs)	3

Dimensions

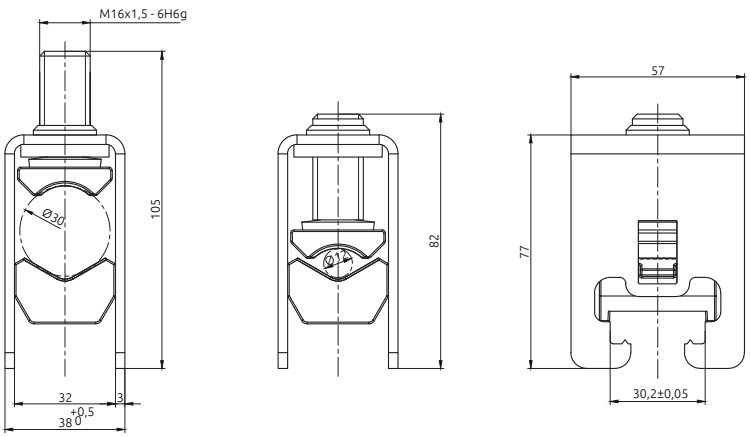

Grounding ball studs

Safety grounding

Tested and certified

in accordance with the standard

IEC/EN 61230 (5, 7)

29,6 kA/1s

Tin plated copper

Grounding ball studs

Grounding ball studs are designed for short-circuiting and grounding dead parts of electrical equipment. These ball studs are made of copper and electrolytically galvanized by Sn. Products are tested and certified in accordance with standards IEC / EN 61230 (5, 7).




	20 mm / M 12	25 mm / M 12	30 mm / M 12	30 mm / M 16*
	MGA2012M10	MGA2512M10	MGA3012M10	MGA3016M10
Technical data				
The diameter of the spherical portion (D) (mm)	20	25	30	30
Length (L) (mm)	58,6	65,6	71,1	91
Dimensions TL / AV / D1 (mm)	16 / 24 / 27	20 / 27 / 30	20 / 27 / 30	24 / 27 / 30
Thread (T)	M12 (internal)	M12 (internal)	M12 (internal)	M16 (internal)
Max. short-circuit current	23,7 kA/1s	29,6 kA/1s	29,6 kA/1s	25 kA/1s
Weight (g)	178	208	262	344
Package (pcs)	20	20	20	10

** Grounding ball stud with 30° bent*

Dimensions

20 mm / M 12
25 mm / M 12
30 mm / M 12

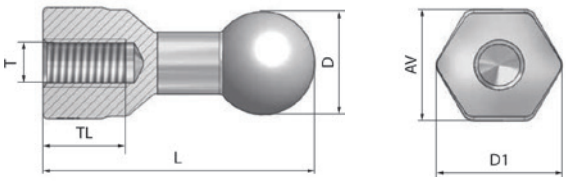

30 mm / M 16

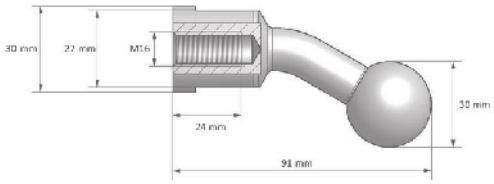

Adapter M 12

Adapter M 12 is compatible three types of grounding ball studs at above.
The adapter is made of steel and plated with zinc.

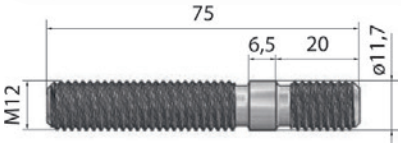

	Adapter M 12
	MGA0012M10
Technical data	
Length (mm)	75
Thread (T)	M12 (external)
Weight (g)	53
Package (pcs)	20

Insulators

Low voltage insulators

Wide range of
polyester
and
polyamide
insulators

High resistance to electrical and mechanical stress

Polyester spacing insulators

MOREK

- Polyester resin with 20% fiberglass
- Zinc-plated steel - threaded inserts

Advantages

- Excellent insulation properties
- Easy fixing thanks to hexagonal perimeter
- Application flexibility with models of different size (height and width)
- High resistance to corrosion, high temperatures and electrical / mechanical stress

Technical specifications

- Color red (RAL 3002)
- Operating temperature - 40 °C / + 130 °C
- Self-extinguishing grade UL94 - V0
- Arc resistance > 180 sec. (according to ASTM D-495)

Products displayed here contain only selection of the range offered. Ask for availability of other dimensions and brass inserts from us!

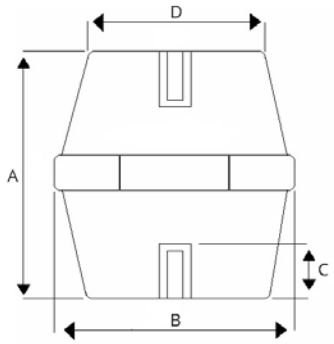

	Dimensions (mm)					Mechanical characteristics				Electrical characteristics			Package
Order code	A	B	C	D	Thread	T.S. (daN)	C.S. (daN)	B.S. (daN)	Tightening torque (Nm)	Rated voltage at 50Hz for 60 sec. (kV)	Flashover voltage (kV AC)	Operating Voltage DC/AC (V)	(pcs)
MID2505H19	25	HEX 19	8	15	5	400	2300	220	6	8	25	600	100
MID2506H19	25	HEX 19	8	15	6	400	2300	220	10,3	8	25	600	100
MID3006H30	30	HEX 30	9	26	6	900	4900	450	10,3	10	30	750	50
MID3008H30	30	HEX 30	9	26	8	900	4900	450	25,5	10	30	750	50
MID3506H32	35	HEX 32	11	28	6	1100	7000	500	10,3	10	40	750	50
MID3508H32	35	HEX 32	11	28	8	1100	7000	500	25,5	10	40	750	50
MID3510H32	35	HEX 32	11	28	10	1100	7000	500	50	10	40	750	50
MID3606H41	36	HEX 41	11	33	6	1400	8300	650	10,3	12	40	1000	25
MID3608H41	36	HEX 41	11	33	8	1400	8300	650	25,5	12	40	1000	25
MID3610H41	36	HEX 41	11	33	10	1400	8300	650	50	12	40	1000	25
MID4006H46	40	HEX 46	15	40	6	1300	8300	700	10,3	12	40	1000	25
MID4008H46	40	HEX 46	15	40	8	1300	8300	700	25,5	12	40	1000	25
MID4010H46	40	HEX 46	15	40	10	1300	8300	700	50	12	40	1000	25
MID4506O41	45	OCT 41	15	33	6	1400	8500	740	10,3	15	40	1000	25
MID4508O41	45	OCT 41	15	33	8	1400	8500	740	25,5	15	40	1000	25
MID4510O41	45	OCT 41	15	33	10	1400	8500	740	50	15	40	1000	25
MID4512O41	45	OCT 41	15	33	12	1400	8500	740	87,2	15	40	1000	25
MID4506H46	45	HEX 46	15	40	6	1500	9000	750	10,3	15	40	1000	25
MID4508H46	45	HEX 46	15	40	8	1500	9000	750	25,5	15	40	1000	25
MID4510H46	45	HEX 46	15	40	10	1500	9000	750	50	15	40	1000	25
MID5006H36	50	HEX 36	15	29	6	1300	8000	650	10,3	20	50	1500	25
MID5008H36	50	HEX 36	15	29	8	1300	8000	650	25,5	20	50	1500	25
MID5010H36	50	HEX 36	15	29	10	1300	8000	650	50	20	50	1500	25
MID5012H36	50	HEX 36	15	29	12	1300	8000	650	87,2	20	50	1500	25
MID5012H50	50	HEX 50	15	42	12	1500	9500	750	87,2	20	50	1500	25
MID6008O55	60	OCT 55	15	43	8	2000	12500	800	25,5	20	50	1500	10
MID6010O55	60	OCT 55	15	43	10	2000	12500	800	50	20	50	1500	10

T.S. - Tensile strength I **C.S.** - Compression strength I **B.S.** - Bending strength

	Dimensions (mm)					Mechanical characteristics				Electrical characteristics			Package
Order code	A	B	C	D	Thread	T.S. (daN)	C.S. (daN)	B.S. (daN)	Tightening torque (Nm)	Rated voltage at 50Hz for 60 sec. (kV)	Flashover voltage (kV AC)	Operating Voltage DC/AC (V)	(pcs)
MID6308H41	63	HEX 41	15	33	8	1600	9000	700	25,5	20	50	1500	10
MID6310H41	63	HEX 41	15	33	10	1600	9000	700	50	20	50	1500	10
MID6312H41	63	HEX 41	15	33	12	1600	9000	700	87,2	20	50	1500	10
MID7010H65	70	HEX 65	25	49	10	3000	15000	1200	50	25	50	2000	10
MID7012H65	70	HEX 65	25	49	12	3000	15000	1200	87,2	25	50	2000	10
MID7016H65	70	HEX 65	25	49	16	3000	15000	1200	210,8	25	50	2000	10
MID7512O65	75	OCT 65	26	51	12	3000	15000	1200	87,2	25	50	2000	5
MID7508H50	75	HEX 50	15	42	8	1800	9500	730	25,5	25	50	2000	5
MID7510H50	75	HEX 50	25	42	10	1800	9500	730	50	25	50	2000	5
MID7512H50	75	HEX 50	25	42	12	1800	9500	730	87,2	25	50	2000	5
MID8012H65	80	HEX 65	25	49	12	3500	16000	1300	87,2	30	50	3600	5
MID1002O65	100	OCT 65	25	51	12	4000	16500	1300	87,2	30	50	3600	5
MID1006O65	100	OCT 65	25	51	16	4000	16500	1300	210,8	30	50	3600	5

T.S. - Tensile strength I **C.S.** - Compression strength I **B.S.** - Bending strength

Dimensions

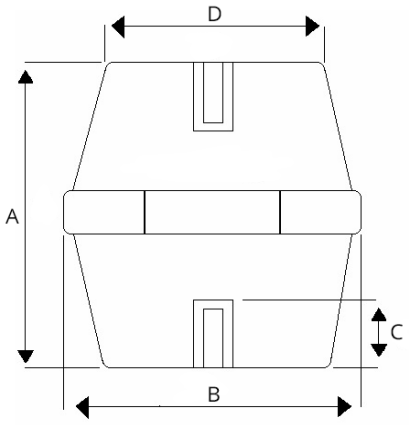

Polyamide spacing insulators

MOREK

- Polyamide PA6 resin with 30% fiberglass
- Zinc-plated steel - threaded inserts

Advantages

- Excellent insulation properties
- Easy fixing thanks to hexagonal perimeter
- Application flexibility with models of different size (height and width)
- High resistance to corrosion, high temperatures and electrical / mechanical stress

Technical specifications

- Color red (RAL 3011)
- Operating temperature - 40 °C / + 120 °C
- Self-extinguishing grade UL94 - V0
- Arc resistance > 180 sec. (according to ASTM D-495)

Products displayed here contain only selection of the range offered. Ask for availability of other dimensions and brass inserts from us!

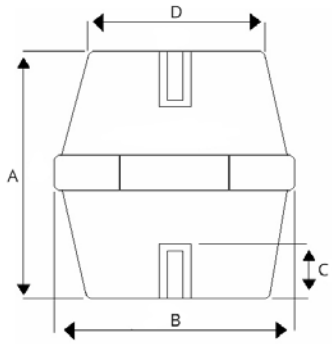

	Dimensions (mm)					Mechanical characteristics				Electrical characteristics			Package
Order code	A	B	C	D	Thread	T.S. (daN)	C.S. (daN)	B.S. (daN)	Tightening torque (Nm)	Rated voltage at 50Hz for 60 sec. (kV)	Flashover voltage (kV AC)	Operating Voltage DC/AC (V)	(pcs)
MIA1504O14	15	OCT 14	4,5	12	4	300	500	60	3	3	8	250	100
MIA1604O14	16	OCT 14	4,5	12	4	300	500	60	3	3	8	250	100
MIA2004H17	20	HEX 17	5	15	4	350	600	80	3	5	15	400	100
MIA2005H17	20	HEX 17	5	15	5	350	600	80	4	5	15	400	100
MIA2006H17	20	HEX 17	5	15	6	350	600	80	8	5	15	400	100
MIA2505H19	25	HEX 19	8	15	5	400	2300	220	4	8	25	600	100
MIA2506H19	25	HEX 19	8	15	6	400	2300	220	8	8	25	600	100
MIA3006H30	30	HEX 30	9	26	6	900	4900	450	10,3	10	30	750	50
MIA3008H30	30	HEX 30	9	26	8	900	4900	450	25,5	10	30	750	50
MIA3506H32	35	HEX 32	11	28	6	1100	7000	500	10,3	10	40	750	50
MIA3508H32	35	HEX 32	11	28	8	1100	7000	500	25,5	10	40	750	50
MIA3510H32	35	HEX 32	11	28	10	1100	7000	500	50	10	40	750	50
MIA3506H41	35	HEX 41	11	33	6	1400	8300	650	10,3	12	40	1000	25
MIA3508H41	35	HEX 41	11	33	8	1400	8300	650	25,5	12	40	1000	25
MIA3510H41	35	HEX 41	11	33	10	1400	8300	650	50	12	40	1000	25
MIA4006H32	40	HEX 32	11	28	6	1100	7000	500	10,3	12	40	1000	50
MIA4008H32	40	HEX 32	11	28	8	1100	7000	500	25,5	12	40	1000	50
MIA4010H32	40	HEX 32	11	28	10	1100	7000	500	50	12	40	1000	50
MIA4006H46	40	HEX 46	11	40	6	1300	8300	700	10,3	12	40	1000	25
MIA4008H46	40	HEX 46	11	40	8	1300	8300	700	25,5	12	40	1000	25
MIA4010H46	40	HEX 46	11	40	10	1300	8300	700	50	12	40	1000	25
MIA4012H46	40	HEX 46	11	40	12	1300	8300	700	87,2	12	40	1000	25
MIA4506O41	45	OCT 41	15	33	6	1400	8500	740	10,3	15	40	1000	25
MIA4508O41	45	OCT 41	15	33	8	1400	8500	740	25,5	15	40	1000	25
MIA4510O41	45	OCT 41	15	33	10	1400	8500	740	50	15	40	1000	25
MIA4508O50	45	OCT 50	15	41	8	1500	10000	800	25,5	15	40	1000	25
MIA4510O50	45	OCT 50	15	41	10	1500	10000	800	50	15	40	1000	25

T.S. - Tensile strength I **C.S.** - Compression strength I **B.S.** - Bending strength

Polyamide spacing insulators

	Dimensions (mm)					Mechanical characteristics				Electrical characteristics			Package
Order code	A	B	C	D	Thread	T.S. (daN)	C.S. (daN)	B.S. (daN)	Tightening torque (Nm)	Rated voltage at 50Hz for 60 sec. (kV)	Flashover voltage (kV AC)	Operating Voltage DC/AC (V)	(pcs)
MIA5006H36	50	HEX 36	15	29	6	1300	8000	650	10,3	20	50	1500	25
MIA5008H36	50	HEX 36	15	29	8	1300	8000	650	25,5	20	50	1500	25
MIA5010H36	50	HEX 36	15	29	10	1300	8000	650	50	20	50	1500	25
MIA5006H50	50	HEX 50	15	42	6	1500	9000	750	10,3	20	50	1500	25
MIA5008H50	50	HEX 50	15	42	8	1500	9000	750	25,5	20	50	1500	25
MIA5010H50	50	HEX 50	15	42	10	1500	9000	750	50	20	50	1500	25
MIA5012H50	50	HEX 50	15	42	12	1500	9000	750	87,2	20	50	1500	25
MIA5510H55	55	HEX 55	15	45	10	1600	9800	780	50	20	50	1500	25
MIA6008O54	60	OCT 54	15	42	8	2000	12500	800	25,5	20	50	1500	10
MIA6010O54	60	OCT 54	15	42	10	2000	12500	800	50	20	50	1500	10
MIA6012O54	60	OCT 54	15	42	12	2000	12500	800	87,2	20	50	1500	10
MIA6310H41	63	HEX 41	15	33	10	1600	9000	700	50	20	50	1500	10
MIA6312H41	63	HEX 41	15	33	12	1600	9000	700	87,2	20	50	1500	10
MIA7512H50	75	HEX 50	25	42	12	1800	9500	730	87,2	25	50	2000	10
MIA7516H50	75	HEX 50	25	42	16	1800	9500	730	210,8	25	50	2000	10
MIA1012H65	100	HEX 65	25	49	12	4000	16500	1300	87,2	30	50	3600	5
MIA1016H65	100	HEX 65	25	49	16	4000	16500	1300	210,8	30	50	3600	5

T.S. - Tensile strength I **C.S.** - Compression strength I **B.S.** - Bending strength

Dimensions

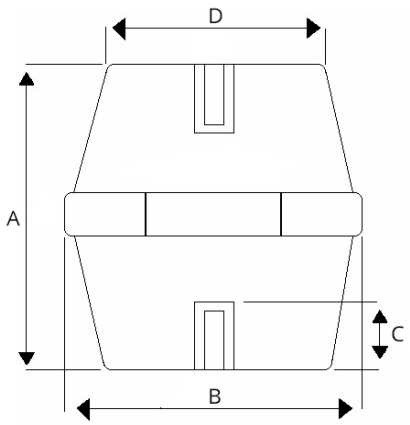

Polyamide stud insulators

MOREK

- Polyamide PA6 resin with 30% fiberglass
- Zinc-plated steel - threaded inserts

Advantages

- Excellent insulation properties
- Easy fixing thanks to hexagonal perimeter
- Application flexibility with models of different size (height and width)
- High resistance to corrosion, high temperatures and electrical / mechanical stress

Technical specifications

- Color red (RAL 3011)
- Operating temperature - 40 °C / + 120 °C
- Self-extinguishing grade UL94 - V0
- Arc resistance > 180 sec. (according to ASTM D-495)

Products displayed here contain only selection of the range offered. Ask for availability of other dimensions and brass inserts from us!

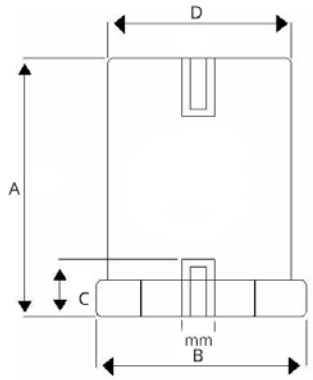

	Dimensions (mm)				Mechanical characteristics					Electrical characteristics		Package
Order code	A	B	C	Thread	T.S. (daN)	C.S. (daN)	B.S. (daN)	Tightening torque (Nm)	Rated voltage at 50Hz for 60 sec. (kV)	Flashover voltage (kV AC)	Operating Voltage DC/AC (V)	(pcs)
Polyamide stud insulators D=20												
MIB1604D20	16	HEX 20	4,5	4	300	2500	200	3	3	10	400	50
MIB1605D20	16	HEX 20	4,5	5	300	2500	200	3,5	3	10	400	50
MIB1606D20	16	HEX 20	4,5	6	300	2500	200	4	3	10	400	50
MIB2005D20	20	HEX 20	5	5	300	2500	180	3,5	3,5	12	600	50
MIB2006D20	20	HEX 20	5	6	300	2500	180	4	3,5	12	600	50
MIB2505D20	25	HEX 20	8	5	300	2500	180	6	5	15	600	50
MIB2506D20	25	HEX 20	8	6	300	2500	180	10,3	5	15	600	50
MIB2508D20	25	HEX 20	8	8	300	2500	180	25,5	5	15	600	50
MIB3005D20	30	HEX 20	9	5	350	2500	150	6	10	20	600	50
MIB3006D20	30	HEX 20	9	6	350	2500	150	10,3	10	20	600	50
MIB3008D20	30	HEX 20	9	8	350	2500	150	25,5	10	20	600	50
MIB3505D20	35	HEX 20	9	5	350	2500	150	6	10	20	600	50
MIB3506D20	35	HEX 20	9	6	350	2500	150	10,3	10	20	600	50
MIB3508D20	35	HEX 20	9	8	350	2500	150	25,5	10	20	600	50
MIB4005D20	40	HEX 20	9	5	350	2500	150	6	10	20	600	50
MIB4006D20	40	HEX 20	9	6	350	2500	150	10,3	10	20	600	50
MIB4008D20	40	HEX 20	9	8	350	2500	150	25,5	10	20	600	50
MIB4505D20	45	HEX 20	9	5	350	2500	150	6	10	20	600	50
MIB4506D20	45	HEX 20	9	6	350	2500	150	10,3	10	20	600	50
MIB4508D20	45	HEX 20	9	8	350	2500	150	25,5	10	20	600	50
MIB5005D20	50	HEX 20	9	5	350	2500	100	6	10	30	750	50
MIB5006D20	50	HEX 20	9	6	350	2500	100	10,3	10	30	750	50

T.S. - Tensile strength I **C.S.** - Compression strength I **B.S.** - Bending strength

Polyamide stud insulators

	Dimentions (mm)				Mechanical characteristics					Electrical characteristics		Package
Order code	A	B	C	Thread	T.S. (daN)	C.S. (daN)	B.S. (daN)	Tightening torque (Nm)	Rated voltage at 50Hz for 60 sec. (kV)	Flashover voltage kV AC	Operating Voltage DC/AC (V)	(pcs
Polyamide stud insulators D=30												
MIB3006D30	30	HEX 30	9	6	900	4500	450	10,3	8	25	750	50
MIB3008D30	30	HEX 30	9	8	900	4500	450	25,5	8	25	750	50
MIB3506D30	35	HEX 30	11	6	900	4500	450	10,3	8	25	750	50
MIB3508D30	35	HEX 30	11	8	900	4500	450	25,5	8	25	750	50
MIB4006D30	40	HEX 30	11	6	900	4500	450	10,3	10	30	1000	50
MIB4008D30	40	HEX 30	11	8	900	4500	450	25,5	10	30	1000	50
MIB4506D30	45	HEX 30	15	6	900	4500	300	10,3	10	30	1000	50
MIB4508D30	45	HEX 30	15	8	900	4500	300	25,5	10	30	1000	50
MIB5506D30	55	HEX 30	15	6	900	4500	200	10,3	15	50	1500	25
MIB5508D30	55	HEX 30	15	8	900	4500	200	25,5	15	50	1500	25
MIB6506D30	65	HEX 30	15	6	900	4500	150	10,3	15	50	1500	25
MIB6508D30	65	HEX 30	15	8	900	4500	150	25,5	15	50	1500	25
MIB7006D30	70	HEX 30	15	6	900	4500	150	10,3	15	50	1500	25
MIB7008D30	70	HEX 30	15	8	900	4500	150	25,5	15	50	1500	25
Polyamide stud insulators D=40												
MIB3008D40	30	HEX 41	9	8	1200	6500	700	25,5	8	25	750	50
MIB3508D40	35	HEX 41	11	8	1200	6500	700	25,5	8	25	750	50
MIB4008D40	40	HEX 41	11	8	1200	6500	600	25,5	10	30	1000	50
MIB4010D40	40	HEX 41	11	10	1200	6500	600	50	10	30	1000	50
MIB4508D40	45	HEX 41	15	8	1200	6500	600	25,5	10	30	1000	50
MIB4510D40	45	HEX 41	15	10	1200	6500	600	50	10	30	1000	50
MIB5008D40	50	HEX 41	15	8	1200	6500	500	25,5	15	40	1500	25
MIB5010D40	50	HEX 41	15	10	1200	6500	500	50	15	40	1500	25
MIB5510D40	55	HEX 41	15	10	1200	6500	500	50	15	40	1500	25
MIB6010D40	60	HEX 41	15	10	1200	6500	500	50	15	40	1500	10
MIB6510D40	65	HEX 41	15	10	1200	6500	300	50	15	40	1500	10
MIB7010D40	70	HEX 41	15	10	1200	6500	300	50	15	40	1500	10

T.S. - Tensile strength I **C.S.** - Compression strength I **B.S.** - Bending strength

Dimensions

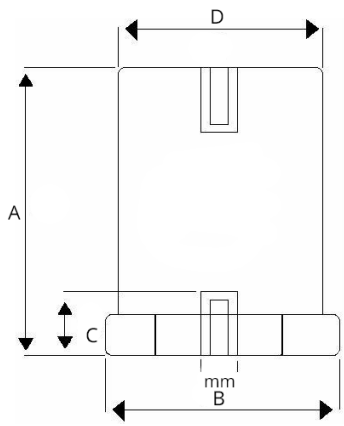

Sendzimir DIN rails

DIN rails are standardized and certified according to EN 60715. Used to mount components and devices (terminal blocks, circuit breakers, contactors, pads etc.), and are available in different versions: in a depth of 7,5 mm or 15 mm, solid or perforated with holes of various diameters and lengths. Standardized delivered length is 2000 mm. Unified shorter lengths are available on request.

In addition to these lengths can be supplied rails in any length till 2000 mm and in minimum order quantity of 100 pieces. Besides the offered profiles, there are also specific profiles supplied. DIN rails are made of steel class. 11, surfaced in design Sendzimir according to EN 10346-2009-03. We can deliver also customized rails made of copper, aluminium or stainless steel.

TS 35 x 7,5 solid

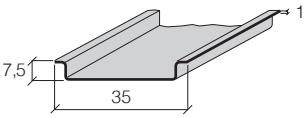

Order code	Length (mm)	Weight (g)	Package (m)
MMD7520A29	2000	680	40
MMD7510A29	1000	340	20

TS 35 x 7,5 perforated (5,2 x 25 mm)

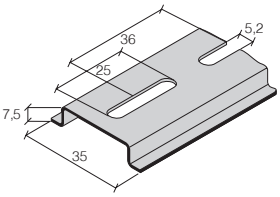

Order code	Length (mm)	Weight (g)	Package (m)
MMD7520B29	2000	600	40
MMD7510B29	1000	300	20

TS 35 x 7,5 perforated (6,3 x 18 mm)

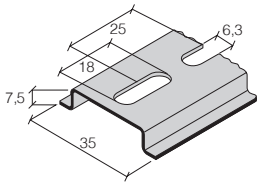

Order code	Length (mm)	Weight (g)	Package (m)
MMD7520C29	2000	600	40
MMD7510C29	1000	300	20

TS 35 x 15 solid

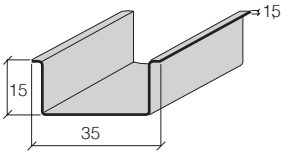

Order code	Length (mm)	Weight (g)	Package (m)
MMD1520A29	2000	1320	20
MMD1510A29	1000	660	10

TS 35 x 15 perforated (5,2 x 25 mm)

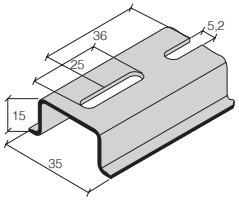

Order code	Length (mm)	Weight (g)	Package (m)
MMD1520B29	2000	1200	20
MMD1510B29	1000	600	10

TS 35 x 15 perforated (6,3 x 18 mm)

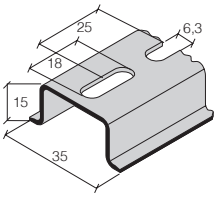

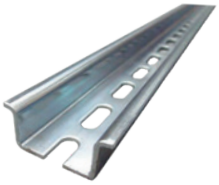

Order code	Length (mm)	Weight (g)	Package (m)
MMD1520C29	2000	1200	20
MMD1510C29	1000	600	10

DIN rails are standardized and certified according to EN 60715. Used to mount components and devices (terminal blocks, circuit breakers, contactors, pads etc.), and are available in different versions: in a depth of 7,5 mm or 15 mm, solid or perforated with holes of various diameters and lengths. Standardized delivered length is 2000 mm. Unified shorter lengths are available on request. In addition to these lengths can be supplied rails in any length till 2000 mm and in minimum order quantity of 100 pieces. Besides the offered profiles, there are also specific profiles supplied. DIN rails are made of steel class. 11, surfaced in design galvanic zinc plating and passivation. We can deliver also customized rails made of copper, aluminium or stainless steel.

TS 35 x 7,5 Galvanic Zn solid

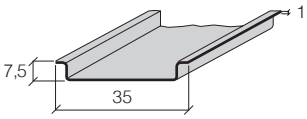

Order code	Length (mm)	Weight (g)	Package (m)
MMD7520Z00	2000	680	40
MMD7510Z00	1000	340	20

TS 35 x 7,5 Galvanic Zn perforated (5,2 x 25 mm)

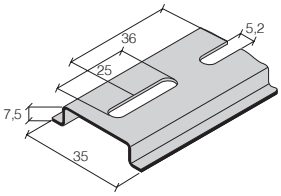

Order code	Length (mm)	Weight (g)	Package (m)
MMD7520Z52	2000	600	40
MMD7510Z52	1000	300	20

TS 35 x 7,5 Galvanic Zn perforated (6,3 x 18 mm)

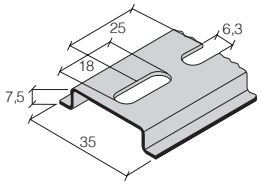

Order code	Length (mm)	Weight (g)	Package (m)
MMD7520Z63	2000	600	40
MMD7510Z63	1000	300	20

TS 35 x 15 Galvanic Zn solid

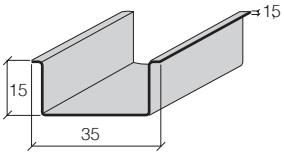

Order code	Length (mm)	Weight (g)	Package (m)
MMD1520Z00	2000	1320	20
MMD1510Z00	1000	660	10

TS 35 x 15 Galvanic Zn perforated (5,2 x 25 mm)

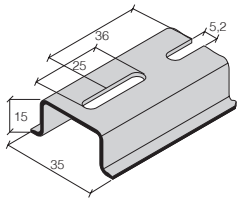

Order code	Length (mm)	Weight (g)	Package (m)
MMD1520Z52	2000	1200	20
MMD1510Z52	1000	600	10

TS 35 x 15 Galvanic Zn perforated (6,3 x 18 mm)

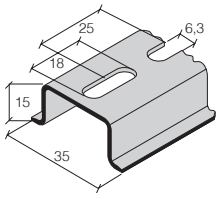

Order code	Length (mm)	Weight (g)	Package (m)
MMD1520Z63	2000	1200	20
MMD1510Z63	1000	600	10

DIN rail brackets

DIN rail brackets are used for mounting of DIN rails and defining the distance between the device and the installation cabinet wall. Sloping DIN brackets are used to fix the mounting rail in an angle of 30°.

It is possible to place DIN rails on the flat brackets horizontally to the wall. All brackets have an opening with metric thread M6 piece for easy and convenient connection to the DIN rail. DIN rail brackets are made of steel surfaced by zinc.

DIN rail bracket – flat

Order code	Type	Thread	Package (pcs)
MMD6420A23	DIN rail bracket flat H20	M6	50
MMD6425A23	DIN rail bracket flat H25	M6	50
MMD6430A23	DIN rail bracket flat H30	M6	50
MMD6440A23	DIN rail bracket flat H40	M6	50
MMD6450A23	DIN rail bracket flat H50	M6	50
MMD6470A23	DIN rail bracket flat H70	M6	50
MMD6490A23	DIN rail bracket flat H90	M6	50

DIN rail bracket – sloping -
pitch of the mounting holes 60 mm

Order code	Type	Thread	Package (pcs)
MMD6049B23	DIN rail bracket sloping H49	M6	50
MMD6058B23	DIN rail bracket sloping H58	M6	50
MMD6068B23	DIN rail bracket sloping H68	M6	50
MMD6078B23	DIN rail bracket sloping H78	M6	50
MMD6088B23	DIN rail bracket sloping H88	M6	50
MMD6098B23	DIN rail bracket sloping H98	M6	50

Dimensions

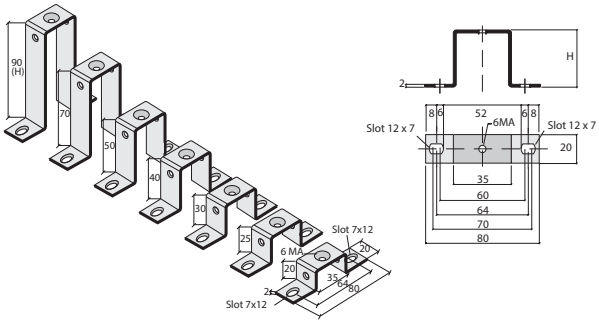

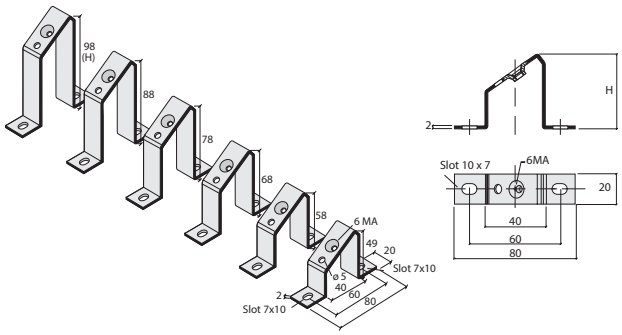

Mounting clips

Mounting clips for mounting rail, allow installation of components which are not pre-set to clIp on to rail. Material: nickel-plated steel.

Order code	Type	Weight (g)	Package (pcs)
MMD5104A23	FIX-KLIPM4	4	100
MMD5105A23	FIX-KLIPM5	4	100

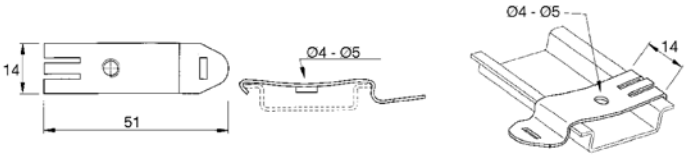

Hexagonal profile male/female metal spacers, also known as threaded standoffs, are suitable for different applications.
The spacers are resistant to high temperatures and available in dimensions suitable for thread holes of M3, M4, M5, M6 and M8 size.

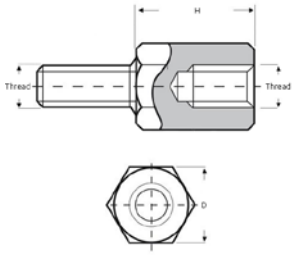

	Dimensions (mm)			Mechanical characteristics			
Order code	H	D	Thread	T.S. (daN)	C.S. (daN)	B.S. (daN)	Tightening torque (Nm)
MMF0053D07	5	7	M3	100	150	15	1,12
MMF0083D07	8	7	M3	100	150	15	1,12
MMF0103D07	10	7	M3	100	150	15	1,12
MMF0123D07	12	7	M3	100	150	15	1,12
MMF0153D07	15	7	M3	100	150	15	1,12
MMF0203D07	20	7	M3	100	150	15	1,12
MMF0253D07	25	7	M3	100	150	15	1,12
MMF0303D07	30	7	M3	100	150	10	1,12
MMF1203D07	120	7	M3	100	220	18	2,55
MMF0104D07	10	7	M4	150	220	18	2,55
MMF0154D07	15	7	M4	150	220	18	2,55
MMF0204D07	20	7	M4	150	220	18	2,55
MMF0254D07	25	7	M4	150	220	18	2,55
MMF0304D07	30	7	M4	150	220	14	2,55
MMF0354D07	35	7	M4	150	220	14	2,55
MMF0404D07	40	7	M4	150	220	14	2,55
MMF0454D07	45	7	M4	150	220	14	2,55
MMF0504D07	50	7	M4	150	220	14	2,55
MMF0604D07	60	7	M4	150	220	14	2,55
MMF0704D07	70	7	M4	150	220	14	2,55
MMF0804D07	80	7	M4	150	220	14	2,55
MMF0904D07	90	7	M4	150	220	14	2,55
MMF1004D07	100	7	M4	150	220	14	2,55
MMF1104D07	110	7	M4	150	220	14	2,55
MMF1204D07	120	7	M4	150	300	50	5,05
MMF0105D08	10	8	M5	250	300	50	5,05
MMF0155D08	15	8	M5	250	300	50	5,05
MMF0205D08	20	8	M5	250	300	50	5,05
MMF0255D08	25	8	M5	250	300	50	5,05
MMF0305D08	30	8	M5	250	300	40	5,05
MMF0355D08	35	8	M5	250	300	40	5,05
MMF0405D08	40	8	M5	250	300	40	5,05
MMF0455D08	45	8	M5	250	300	40	5,05
MMF0505D08	50	8	M5	250	300	40	5,05
MMF0605D08	60	8	M5	250	300	40	5,05
MMF0705D08	70	8	M5	250	300	40	5,05
MMF0805D08	80	8	M5	250	300	40	5,05
MMF0905D08	90	8	M5	250	300	40	5,05
MMF1005D08	100	8	M5	250	300	40	5,05

T.S. - Tensile strength I **C.S.** - Compression strength I **B.S.** - Bending strength

	Dimensions (mm)			Mechanical characteristics			
Order code	H	D	Thread	T.S. (daN)	C.S. (daN)	B.S. (daN)	Tightening torque (Nm)
MMF1105D08	110	8	M5	250	300	40	5,05
MMF1205D08	120	8	M5	250	300	40	5,05
MMF0106D10	10	10	M6	300	400	60	8,72
MMF0156D10	15	10	M6	300	400	60	8,72
MMF0206D10	20	10	M6	300	400	60	8,72
MMF0256D10	25	10	M6	300	400	60	8,72
MMF0306D10	30	10	M6	300	400	60	8,72
MMF0356D10	35	10	M6	300	400	50	8,72
MMF0406D10	40	10	M6	300	400	50	8,72
MMF0456D10	45	10	M6	300	400	50	8,72
MMF0506D10	50	10	M6	300	400	50	8,72
MMF0606D10	60	10	M6	300	400	50	8,72
MMF0706D10	70	10	M6	300	400	50	8,72
MMF0806D10	80	10	M6	300	400	50	8,72
MMF0906D10	90	10	M6	300	400	50	8,72
MMF1006D10	100	10	M6	300	400	50	8,72
MMF1106D10	110	10	M6	300	400	50	8,72
MMF1206D10	120	10	M6	300	400	50	8,72
MMF0108D12	10	12	M8	320	420	60	21,53
MMF0158D12	15	12	M8	320	420	60	21,53
MMF0208D12	20	12	M8	320	420	60	21,53
MMF0258D12	25	12	M8	320	420	60	21,53
MMF0308D12	30	12	M8	320	420	60	21,53
MMF0358D12	35	12	M8	320	420	60	21,53
MMF0408D12	40	12	M8	320	420	60	21,53
MMF0458D12	45	12	M8	320	420	60	21,53
MMF0508D12	50	12	M8	320	420	60	21,53
MMF0608D12	60	12	M8	320	420	60	21,53
MMF0708D12	70	12	M8	320	420	60	21,53
MMF0808D12	80	12	M8	320	420	60	21,53
MMF0908D12	90	12	M8	320	420	60	21,53
MMF1008D12	100	12	M8	320	420	60	21,53
MMF1108D12	110	12	M8	320	420	60	21,53
MMF1208D12	120	12	M8	320	420	60	21,53
MMF0108D13	10	13	M8	350	450	70	21,53
MMF0158D13	15	13	M8	350	450	70	21,53
MMF0208D13	20	13	M8	350	450	70	21,53
MMF0258D13	25	13	M8	350	450	70	21,53
MMF0308D13	30	13	M8	350	450	70	21,53
MMF0358D13	35	13	M8	350	450	70	21,53
MMF0408D13	40	13	M8	350	450	60	21,53
MMF0458D13	45	13	M8	350	450	60	21,53
MMF0508D13	50	13	M8	350	450	60	21,53
MMF0608D13	60	13	M8	350	450	60	21,53
MMF0708D13	70	13	M8	350	450	60	21,53
MMF0808D13	80	13	M8	350	450	60	21,53
MMF0908D13	90	13	M8	350	450	60	21,53
MMF1008D13	100	13	M8	350	450	60	21,53
MMF1108D13	110	13	M8	350	450	60	21,53
MMF1208D13	120	13	M8	350	450	60	21,53

T.S. - Tensile strength I **C.S.** - Compression strength I **B.S.** - Bending strength

Insulated copper flexibars Moflex

Insulated copper flexibars Moflex are manufactured out of highly flexible copper strips either in bare or tinned version. They are insulated with high quality mechanical, electrical and self-extinguishing PVC.

Technical details

Electrolytic copper Cu-ETP 99,90%
Available in plain or tin plated copper

Insulation

Self extinguishing UL 94 V-0 black PVC insulation
Elongation: > 200 %
Tensile strength: > 15 N/mm²

Electrical characteristics

Nominal voltage 1000 V AC – 1500 V DC
Dielectric strength of the insulation: > 20 KV/mm
Operating temperature: -40 °C* up to 105 °C*
** not during dynamic pressure*

5 year
warranty

Due to skin effect,
on average

45 %

smaller cross-section
compared to regular
copper cable

Copper cable
150 mm²

1 x Moflex
24 x 1 x 2
48 mm²

320 A
68 %
smaller

Copper cables
2 x 150 mm²
300 mm²

1 x Moflex
32 x 1 x 5
160 mm²

630 A
47 %
smaller

Copper cables
3 x 240 mm²
720 mm²

1 x Moflex
80 x 1 x 6
480 mm²

1250 A
33 %
smaller

In all examples above, intensities of Moflex and regular cable are calculated using the temperature rise value of 50° C.

Remarks about the tables

Description of the order code
E.g., MMC0801001
MM – Moflex
C – red copper
(T - in case of tinned copper)
080 – width
10 – number of sheets

* Products with the length of 3 meters can be ordered separately

** Reduction factor for the use of flexibars in parallel (see table on page 62)

When you use the Moflex flexibars parallel for the same phase, you need to use the reduction factoras shown in the following example.

MMC0500401 Moflex 50x1x4, 200 mm², 732A at ΔT=50
2 flexibars in parallel: 732 x1,72 = 1259A
3 flexibars in parallel: 732 x2,25 = 1647A

The table on the page 62 indicates the temperature rise produced by chosen current in the given cross section. This calculation does not take into account the heat dissipation from the switchboard.

Technical specification (based on width)

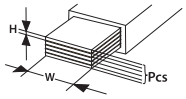

W (mm)	Red copper Order code	Tinned copper Order code	W x H x Pcs	Length*	Package (pcs)	Copper weight per meter (kg)
9	MMC0090201	MMT0090201	**9 x 0,8 x 2**	2 m	10	0,128
	MMC0090301	MMT0090301	**9 x 0,8 x 3**	2 m	10	0,193
	MMC0090401	MMT0090401	**9 x 0,8 x 4**	2 m	10	0,256
	MMC0090501	MMT0090501	**9 x 0,8 x 5**	2 m	10	0,321
	MMC0090601	MMT0090601	**9 x 0,8 x 6**	2 m	10	0,385
15,5	MMC0160201	MMT0160201	**15,5 x 0,8 x 2**	2 m	10	0,214
	MMC0160401	MMT0160401	**15,5 x 0.8 x 4**	2 m	10	0,428
	MMC0160601	MMT0160601	**15,5 x 0,8 x 6**	2 m	10	0,642
	MMC0161001	MMT0161001	**15,5 x 0,8 x 10**	2 m	10	1,071
20	MMC0200201	MMT0200201	**20 x 1 x 2**	2 m	5	0,357
	MMC0200301	MMT0200301	**20 x 1 x 3**	2 m	5	0,535
	MMC0200401	MMT0200401	**20 x 1 x 4**	2 m	5	0,714
	MMC0200501	MMT0200501	**20 x 1 x 5**	2 m	5	0,892
	MMC0200601	MMT0200601	**20 x 1 x 6**	2 m	5	1,071
	MMC0201001	MMT0201001	**20 x 1 x 10**	2 m	5	1,784
24	MMC0240201	MMT0240201	**24 x 1 x 2**	2 m	5	0,428
	MMC0240301	MMT0240301	**24 x 1 x 3**	2 m	5	0,642
	MMC0240401	MMT0240401	**24 x 1 x 4**	2 m	5	0,857
	MMC0240501	MMT0240501	**24 x 1 x 5**	2 m	5	1,071
	MMC0240601	MMT0240601	**24 x 1 x 6**	2 m	5	1,285
	MMC0240801	MMT0240801	**24 x 1 x 8**	2 m	5	1,713
	MMC0241001	MMT0241001	**24 x 1 x 10**	2 m	5	2,142
32	MMC0320201	MMT0320201	**32 x 1 x 2**	2 m	5	0,571
	MMC0320301	MMT0320301	**32 x 1 x 3**	2 m	5	0,857
	MMC0320401	MMT0320401	**32 x 1 x 4**	2 m	5	1,142
	MMC0320501	MMT0320501	**32 x 1 x 5**	2 m	5	1,428
	MMC0320601	MMT0320601	**32 x 1 x 6**	2 m	5	1,713
	MMC0320801	MMT0320801	**32 x 1 x 8**	2 m	5	2,284
	MMC0321001	MMT0321001	**32 x 1 x 10**	2 m	5	2,851
40	MMC0400201	MMT0400201	**40 x 1 x 2**	2 m	5	0,714
	MMC0400301	MMT0400301	**40 x 1 x 3**	2 m	5	1,071
	MMC0400401	MMT0400401	**40 x 1 x 4**	2 m	5	1,428
	MMC0400501	MMT0400501	**40 x 1 x 5**	2 m	5	1,784
	MMC0400601	MMT0400601	**40 x 1 x 6**	2 m	5	2,141
	MMC0400801	MMT0400801	**40 x 1 x 8**	2 m	5	2,855
	MMC0401001	MMT0401001	**40 x 1 x 10**	2 m	5	3,569
50	MMC0500301	MMT0500301	**50 x 1 x 3**	2 m	2	1,338
	MMC0500401	MMT0500401	**50 x 1 x 4**	2 m	2	1,784
	MMC0500501	MMT0500501	**50 x 1 x 5**	2 m	2	2,231
	MMC0500601	MMT0500601	**50 x 1 x 6**	2 m	2	2,677
	MMC0500801	MMT0500801	**50 x 1 x 8**	2 m	2	3,569
	MMC0501001	MMT0501001	**50 x 1 x 10**	2 m	2	4,461
63	MMC0630301	MMT0630301	**63 x 1 x 3**	2 m	2	1,686
	MMC0630401	MMT0630401	**63 x 1 x 4**	2 m	2	2,248
	MMC0630501	MMT0630501	**63 x 1 x 5**	2 m	2	2,811
	MMC0630601	MMT0630601	**63 x 1 x 6**	2 m	2	3,373
	MMC0630801	MMT0630801	**63 x 1 x 8**	2 m	2	4,497
	MMC0631001	MMT0631001	**63 x 1 x 10**	2 m	2	5,621
80	MMC0800301	MMT0800301	**80 x 1 x 3**	2 m	2	2,141
	MMC0800401	MMT0800401	**80 x 1 x 4**	2 m	2	2,851
	MMC0800501	MMT0800501	**80 x 1 x 5**	2 m	2	3,569
	MMC0800601	MMT0800601	**80 x 1 x 6**	2 m	2	4,283
	MMC0800801	MMT0800801	**80 x 1 x 8**	2 m	2	5,710
	MMC0801001	MMT0801001	**80 x 1 x 10**	2 m	2	7,138
100	MMC1000401	MMT1000401	**100 x 1 x 4**	2 m	2	3,569
	MMC1000501	MMT1000501	**100 x 1 x 5**	2 m	2	4,461
	MMC1000601	MMT1000601	**100 x 1 x 6**	2 m	2	5,353
	MMC1000801	MMT1000801	**100 x 1 x 8**	2 m	2	7,138
	MMC1001001	MMT1001001	**100 x 1 x 10**	2 m	2	8,922

Technical specification (based on amperage)

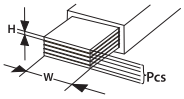

Amperage (A)	Red copper Part no.	Tinned copper Part no.	W		H		Pcs	Copper weight per meter (kg)	Cu cross section (mm²)	Ampacity at rise of temperature from 35° C to: 105 °C ΔT=70	95 °C ΔT=60	85 °C ΔT=50	75 °C ΔT=40	65 °C ΔT=30	Reduction factor**	
> 80	MMC0090201	MMT0090201	9	x	0,8	x	2	0,128	14	113	105	**96**	86	74	1,72	2,25
> 125	MMC0090301	MMT0090301	9	x	0,8	x	3	0,193	21,6	160	149	**136**	121	104	1,72	2,25
> 160	MMC0090401	MMT0090401	9	x	0,8	x	4	0,256	29	204	189	**173**	155	133	1,72	2,25
	MMC0090501	MMT0090501	9	x	0,8	x	5	0,321	36	272	253	**231**	206	177	1,72	2,25
	MMC0160201	MMT0160201	15,5	x	0,8	x	2	0,214	24,8	197	183	**167**	149	128	1,72	2,25
> 250	MMC0090601	MMT0090601	9	x	0,8	x	6	0,385	43,2	340	316	**289**	258	221	1,72	2,25
	MMC0200201	MMT0200201	20	x	1	x	2	0,357	40	329	306	**280**	250	215	1,72	2,25
> 320	MMC0160401	MMT0160401	15,5	x	0,8	x	4	0,428	49,6	379	353	**322**	288	247	1,72	2,25
	MMC0200301	MMT0200301	20	x	1	x	3	0,535	60	427	397	**363**	324	278	1,72	2,25
	MMC0240201	MMT0240201	24	x	1	x	2	0,428	48	451	419	**384**	342	294	1,72	2,25
> 400	MMC0160601	MMT0160601	15,5	x	0,8	x	6	0,642	74,4	489	455	**416**	371	319	1,72	2,25
	MMC0161001	MMT0161001	15,5	x	0,8	x	10	1,071	124	539	501	**458**	409	351	1,72	2,25
	MMC0200401	MMT0200401	20	x	1	x	4	0,714	80	478	444	**406**	363	311	1,72	2,25
	MMC0200501	MMT0200501	20	x	1	x	5	0,892	100	497	463	**423**	378	324	1,72	2,25
	MMC0200601	MMT0200601	20	x	1	x	6	1,071	120	547	509	**465**	415	356	1,72	2,25
	MMC0240301	MMT0240301	24	x	1	x	3	0,642	72	491	457	**418**	373	320	1,72	2,25
	MMC0240401	MMT0240401	24	x	1	x	4	0,857	96	553	514	**470**	420	360	1,72	2,25
	MMC0320201	MMT0320201	32	x	1	x	2	0,571	64	483	450	**411**	367	315	1,72	2,25
	MMC0320301	MMT0320301	32	x	1	x	3	0,857	96	569	529	**484**	432	371	1,72	2,25
	MMC0400201	MMT0400201	40	x	1	x	2	0,714	80	535	498	**455**	406	349	1,72	2,25
> 500	MMC0240501	MMT0240501	24	x	1	x	5	1,071	120	610	568	**519**	463	398	1,72	2,25
	MMC0240601	MMT0240601	24	x	1	x	6	1,285	144	674	626	**573**	511	439	1,72	2,25
	MMC0320401	MMT0320401	32	x	1	x	4	1,142	128	652	606	**554**	495	425	1,72	2,25
	MMC0400301	MMT0400301	40	x	1	x	3	1,071	120	618	575	**525**	469	403	1,72	2,25
	MMC0400401	MMT0400401	40	x	1	x	4	1,428	160	727	676	**618**	552	474	1,72	2,25
	MMC0500301	MMT0500301	50	x	1	x	3	1,338	150	701	652	**597**	532	457	1,72	2,25
> 630	MMC0201001	MMT0201001	20	x	1	x	10	1,784	200	763	709	**649**	579	497	1,72	2,25
	MMC0240801	MMT0240801	24	x	1	x	8	1,713	192	800	744	**681**	607	522	1,72	2,25
	MMC0241001	MMT0241001	24	x	1	x	10	2,142	240	875	814	**744**	664	570	1,72	2,25
	MMC0320501	MMT0320501	32	x	1	x	5	1,428	160	762	708	**648**	578	496	1,72	2,25
	MMC0320601	MMT0320601	32	x	1	x	6	1,713	192	850	790	**723**	645	554	1,72	2,25
	MMC0400501	MMT0400501	40	x	1	x	5	1,784	200	903	840	**768**	686	589	1,72	2,25
	MMC0500401	MMT0500401	50	x	1	x	4	1,784	200	861	801	**732**	654	561	1,72	2,25
	MMC0630301	MMT0630301	63	x	1	x	3	1,686	189	802	746	**683**	609	523	1,65	2,12
> 800	MMC0320801	MMT0320801	32	x	1	x	8	2,284	256	1023	951	**870**	777	667	1,72	2,25
	MMC0400601	MMT0400601	40	x	1	x	6	2,141	240	1018	947	**866**	773	663	1,72	2,25
	MMC0500501	MMT0500501	50	x	1	x	5	2,231	250	1098	1021	**934**	834	716	1,72	2,25
	MMC0630401	MMT0630401	63	x	1	x	4	2,248	252	1013	942	**861**	769	660	1,65	2,12
	MMC0800301	MMT0800301	80	x	1	x	3	2,141	240	977	909	**831**	742	637	1,65	2,12
> 1000	MMC0321001	MMT0321001	32	x	1	x	10	2,851	320	1233	1147	**1049**	936	804	1,72	2,25
	MMC0400801	MMT0400801	40	x	1	x	8	2,855	320	1233	1146	**1048**	936	803	1,72	2,25
	MMC0401001	MMT0401001	40	x	1	x	10	3,569	400	1397	1300	**1189**	1061	911	1,65	2,12
	MMC0500601	MMT0500601	50	x	1	x	6	2,677	300	1226	1140	**1043**	931	799	1,65	2,12
	MMC0500801	MMT0500801	50	x	1	x	8	3,569	400	1392	1295	**1184**	1057	907	1,65	2,12
	MMC0630501	MMT0630501	63	x	1	x	5	2,811	315	1223	1137	**1040**	928	797	1,65	2,12
	MMC0630601	MMT0630601	63	x	1	x	6	3,373	378	1442	1341	**1226**	1095	940	1,65	2,12
	MMC0800401	MMT0800401	80	x	1	x	4	2,851	320	1202	1118	**1022**	912	783	1,65	2,12
	MMC0800501	MMT0800501	80	x	1	x	5	3,569	400	1395	1298	**1187**	1059	909	1,65	2,12
	MMC1000401	MMT1000401	100	x	1	x	4	3,569	400	1449	1348	**1233**	1100	945	1,6	2,02
> 1250	MMC0501001	MMT0501001	50	x	1	x	10	4,461	500	1651	1535	**1404**	1253	1076	1,65	2,12
	MMC0630801	MMT0630801	63	x	1	x	8	4,497	504	1656	1540	**1409**	1257	1079	1,65	2,12
	MMC0800601	MMT0800601	80	x	1	x	6	4,283	480	1630	1516	**1387**	1238	1063	1,65	2,12
	MMC1000501	MMT1000501	100	x	1	x	5	4,461	500	1638	1523	**1393**	1243	1067	1,6	2,02
	MMC1000601	MMT1000601	100	x	1	x	6	5,353	600	1845	1715	**1569**	1400	1202	1,6	2,02
> 1600	MMC0631001	MMT0631001	63	x	1	x	10	5,621	630	1901	1768	**1617**	1443	1239	1,65	2,12
	MMC0800801	MMT0800801	80	x	1	x	8	5,71	640	1902	1769	**1618**	1444	1240	1,65	2,12
	MMC0801001	MMT0801001	80	x	1	x	10	7,138	800	2106	1958	**1791**	1599	1372	1,65	2,12
	MMC1000801	MMT1000801	100	x	1	x	8	7,138	800	2152	2001	**1830**	1634	1402	1,6	2,02
> 2000	MMC1001001	MMT1001001	100	x	1	x	10	8,922	1000	2353	2188	**2001**	1786	1533	1,6	2,02

Selection of Moflex

ΔT = temperature rise of the Moflex conductor (°C)
T1 = internal temperature of the switchboard (°C)
T2 = temperature of the Moflex conductor (°C)

For example In = 1000A connection

Step 1: T1 = 35 °C and T2 = 85 °C
ΔT = T2 - T1
ΔT = 85 °C - 35 °C
ΔT = 50 °C

Step 2: Please find from the page 62 table on the column ΔT = 50 the closest value of the 1000A.
MMC0321001 Moflex 32x1x10, 320 mm², 1049A
or
MMC0630501 Moflex 63x1x5, 315 mm², 1040A.

Step 3: Select the Moflex flexibar according to the equipment terminal width.

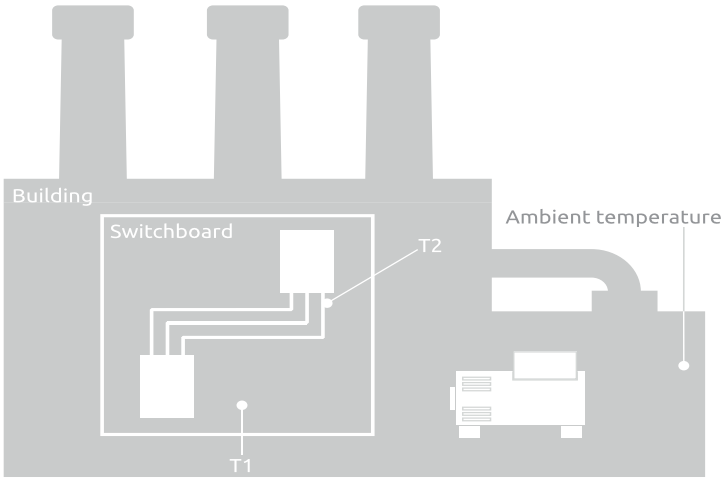

Moflex saves you time and money

Does not require additional connection parts and saves the time of installation

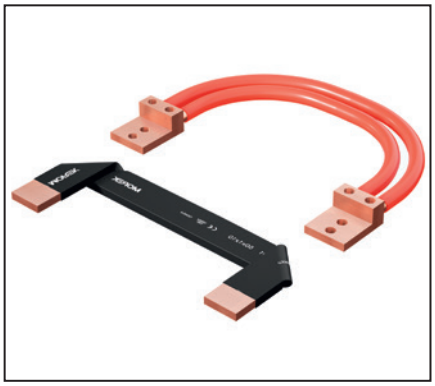

Makes direct connection without additional connectors, enables you to save space in the panel

Gives additional flexibility comparing to standard rigid bar and it is easily adapted to unexpected project change

Assembly instructions

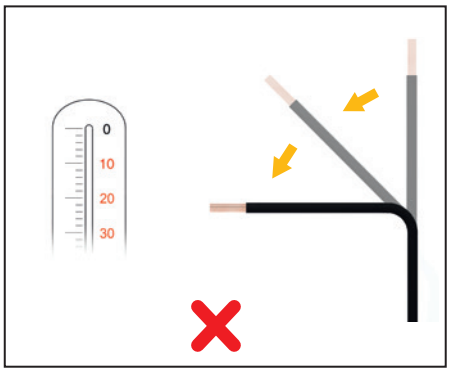

No bending at low temperatures (< 0°C or < 30F)
Elongation of the coating before breakage is reduced at low temperatures. Recommended is bending at room temperature.

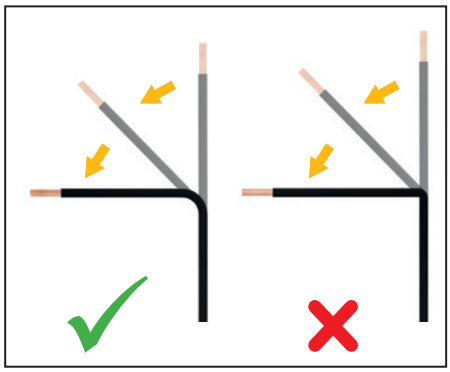

No sharp-edged bending
Recommended inner radius for bending:
busbar thickness 1 - 5 mm: radius 5 mm
busbar thickness 6 - 10 mm: radius = thickness

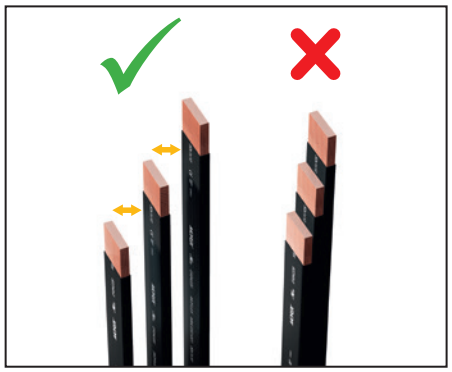

Parallel assembly has influence to heat radiation
Recommended distance between bars = min. 1 x bar width. Please pay attention to correction factors for parallel assembly!

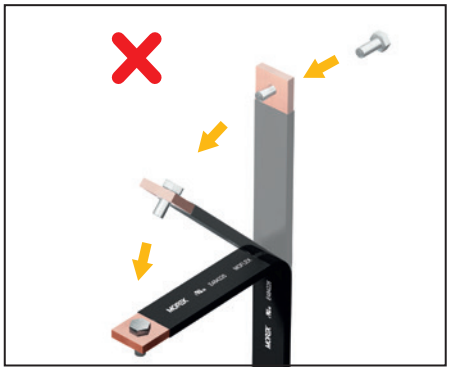

Copper files slide when bending to compensate the different length of inner and outer file
No fixation <u>before</u> bending! It hinders the slide and may lead to burst of PVC-coating.

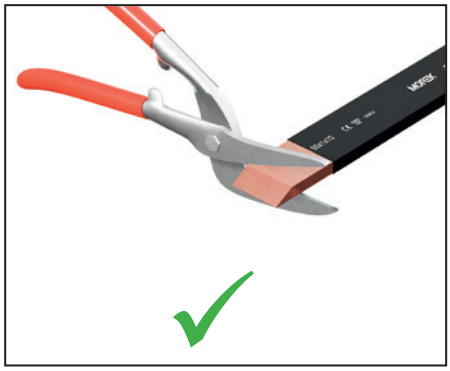

Bars must be cut if copper slides emerge after bending

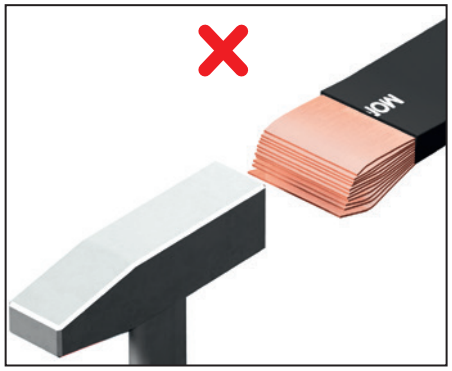

Heavy push back of copper files may cause deformation with resulting damage of PVC-coating

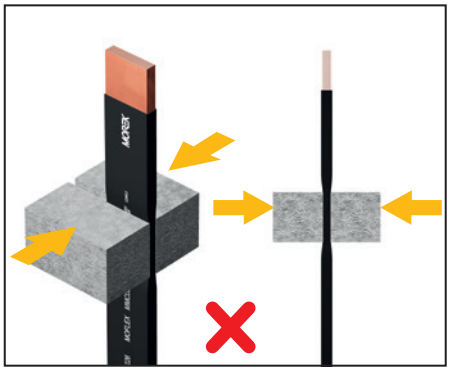

Please avoid crushing of the PVC coating
Damage of coating or reduced wall thickness endangers function of isolation.

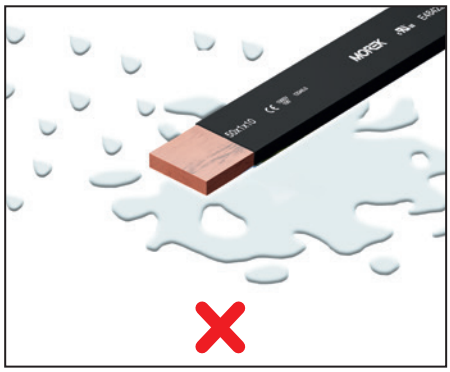

Do not expose to dirt, water and humidity
Humidity may invade by the open ends of the busbars. This causes copper oxidation and endangers operating safety.

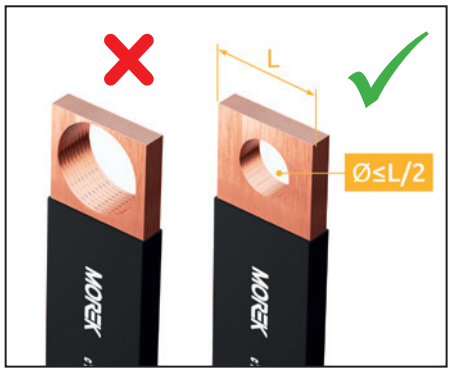

Do not drill holes exceeding half of the width of the bar

Drilling tool for Moflex

Drilling tool for Moflex is designed to drill the correct hole to the multiple layer flexibars. Combining suitable width drilling tool with right hole size drilling guide, will give big variety of the drilling holes to the flexibars.

NEW

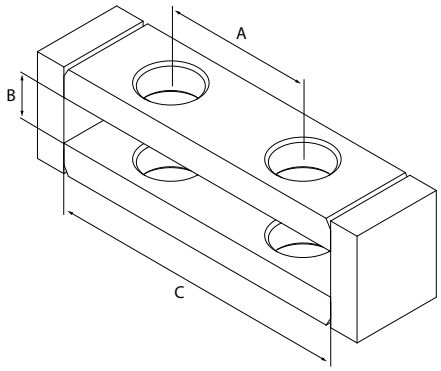

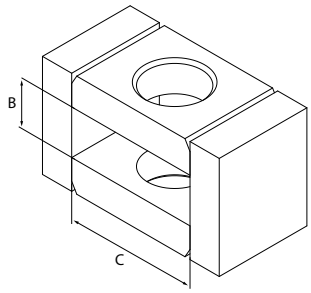

Drilling tool for Moflex

Order code	Product name	Flexibar max. width (mm)	Dimensions (mm)		
			A	B	C
MMA0001E30	MD16	15,5 x 0,8 x 10	-	15	16
MMA0002E30	MD20	20 x 1 x 10	-	15	20,5
MMA0003E30	MD24	24 x 1 x 10	-	15	24,5
MMA0004E30	MD32	32 x 1 x 10	-	15	32,5
MMA0005E30	MD40	40 x 1 x 10	-	15	40,5
MMA0006E30	MD50	50 x 1 x 10	-	15	50,5
MMA0007E30	MD63	63 x 1 x 10	-	15	63,5
MMA0008E30	MD80	80 x 1 x 10	40	15	80,5
MMA0009E30	MD100	100 x 1 x 10	50	15	101
MMA0010E30	MD120	120 x 1 x 10	60	15	121

Drilling guide for drilling tool

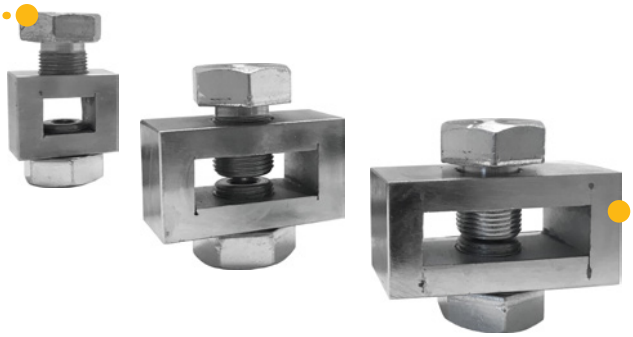

Drilling tool for Moflex

Drilling guide for drilling tool

Order code	Product name	Drilling hole
MMA0011E30	DG7	6
MMA0012E30	DG9	8
MMA0013E30	DG11	10
MMA0014E30	DG13	12

Moflex flexibar clamp

Moflex clamp is designed for connecting Moflex flexibars to copper busbar, enabling fastening up to 50 x 10 mm Moflex flexibars to 50 x 10 mm copper busbars.

Advantages

- Quick and easy installation
- Ideal for on site modifications
- Allows for excellent electrical contact
- Terminal has visible indication of tightening torque

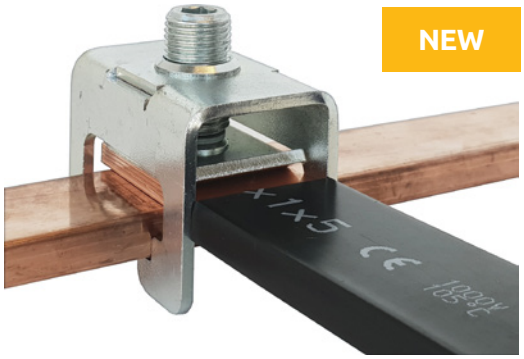

	MFC30-32	MFC40-32	MFC40-50	MFC50-50
	MFC3010E32	MFC4010E32	MFC4010E50	MFC5010E50
Mounting Cu busbar (mm)	30x5-10	40x5-10	40x5-10	50x5-10
For Moflex width (mm)	9-32	9-32	9-50	9-50
Moflex max. layers	10	10	10	10
Technical data				
Nominal voltage AC / DC (V)	1000	1000	1000	1000
Width / Height / Length (mm)	40 / 49 / 57	40 / 49 / 67	58 / 49 / 67	58 / 49 / 77
Screw, hexagonal key (AV)	No. 8	No. 8	No. 8	No. 8
Tightening torque (Nm)	30	30	35	35
Weight (g)	200	225	275	310
Package (pcs)	3	3	3	3

Dimensions

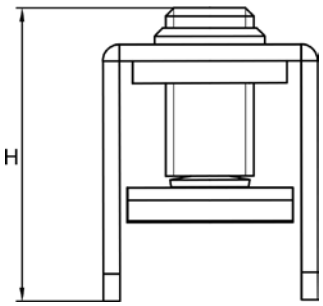

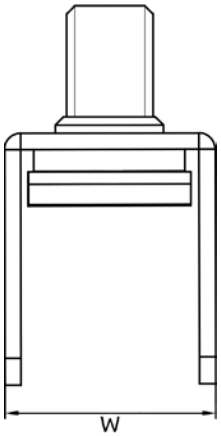

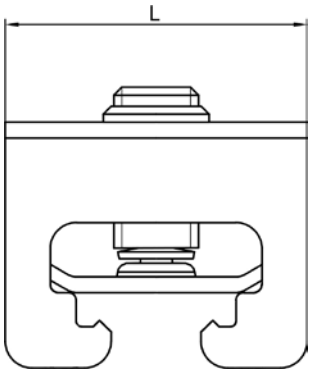

Sealing and edge protection profiles

Wide range of sealing and edge protection profiles

Custom made profiles available for special applications:

- Low-friction coating
- Fire- / flame-proof profiles
- Hygiene profiles

Profiles in pre-cut lengths of your choice

Edge protection profiles

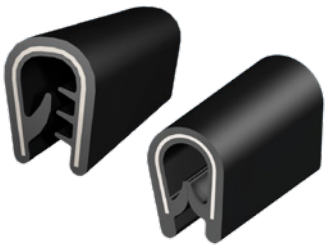

The edge protection profiles are designed to protect the transition edges (cable tray or cabinet racks, etc.). The body of protection profile is made of PVC material and the product is delivered in two colors - in grey (RAL 7035) or black. The skeleton is made of metal profile that allows easy installation without additional tools. The edge protection profile is offered in two standard versions with the possibility of use on sheet thickness 1 - 2 mm or 1 - 4 mm. The operating temperature is from -25 °C to +65 °C.

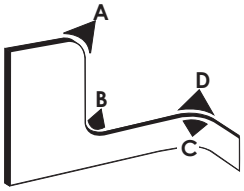

	Order code	Color	Clamping range (mm)	The minimum bending radius	Weight (kg)	Package (m)
	MCA003AG12	grey	1 - 2	A = 15, B = 15, C = 10, D = 10	7	100
	MCA003BG12				0,7	10
	MCA002AB12	black	1 - 2	A = 15, B = 15, C = 10, D = 10	7	100
	MCA002BB12				0,7	10
	MCA015AG12	grey	1 - 4	A = 30, B = 20, C = 20, D = 20	16	100
	MCA015BG12				1,6	10
	MCA001AB12	black	1 - 4	A = 30, B = 20, C = 20, D = 20	16	100
	MCA001BB12				1,6	10
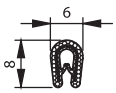	MCA007AB12	black	0,8 - 1,5	A = 10, B = 10, C = 10, D = 10	7	100
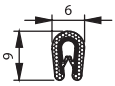	MCA008AB12	black	1 - 2	A = 10, B = 10, C = 10, D = 10	8	100
	MCA010AB12	black	2 - 5	A = 40, B = 40, C = 20, D = 20	20	100
	MCA011AB12	black	1 - 2	A = 20, B = 20, C = 15, D = 15	11	100
	MCA012AB12		2 - 4			
	MCA013AB12	black	1 - 2,5	A = 20, B = 20, C = 15, D = 15	13	100
	MCA004AB12	black	1 - 2,5	A = 50, B = 40, C = 30, D = 30	16	100
	MCA005AB12		2 - 4			
	MCA006AB12		4 - 6			
	MCA009AB12	black	1 - 4	A = 40, B = 30, C = 20, D = 20	17	100
	MCA014AB12	black	10 - 12	-	20	100

Self-gripping sealing profile made with a black PVC carrier with sealing lip or sealing tube from EPDM. Integrated steel strip core. Other colors are available on request.

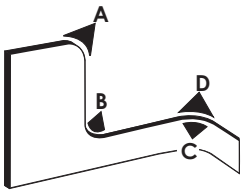

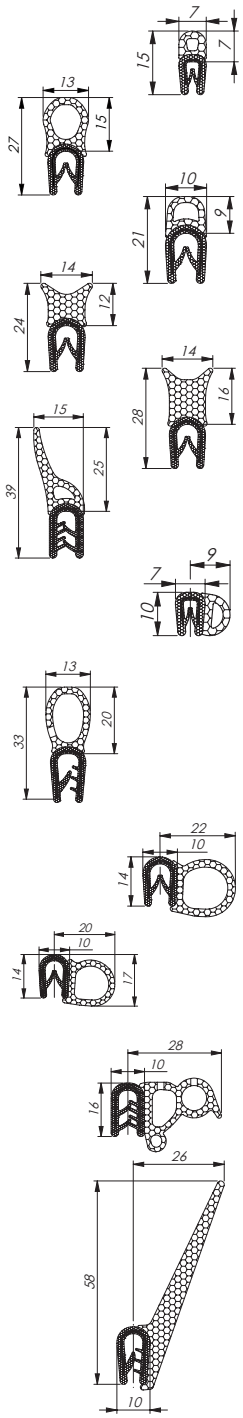

Order code	Color	Clamping range (mm)	The minimum bending radius	Weight (kg/m)	Package (m)
MCC001AB12	black	1 - 2	A = 20, B = 40, C = 10, D = 10	0,08	100
MCC002AB12	black	1 - 4	A = 60, B = 80, C = 20, D = 20	0,265	50
MCC007AB12	black	1 - 4	A = 70, B = 80, C = 15, D = 15	0,17	50
MCC011AB12	black	1 - 4	A = 50, B = 150, C = 50, D = 50	0,218	50
MCC012AB12	black	1 - 4	A = 50, B = 150, C = 50, D = 50	0,085	50
MCC013AB12	black	1,5 - 3,5	A = 80, B = 150, C = 30, D = 30	0,257	50
MCB005AB12	black	1 - 2	A = 20, B = 15, C = 30, D = 30	0,085	100
MCC008AB12	black	1 - 2,5	A = 80, B = 100, C = 20, D = 20	0,2306	50
MCC009AB12		2 - 4		0,24	
MCC010AB12		4 - 6		0,224	
MCB004AB12	black	1 - 4	A = 50, B = 30, C = 100, D = 120	0,2	50
MCB002AB12	black	1 - 4	A = 60, B = 50, C = 120, D = 120	0,265	50
MCB011AB12	black	1 - 2,5	A = 80, B = 80, C = 140, D = 140	0,22	50
MCB012AB12		2,5 - 4		0,28	
MCB013AB12		4 - 6	A = 80, B = 80, C = 140, D = 140 Min. 1000 m / order	0,31	
MCB038AB12	black	1 - 2,5	A = 80, B = -, C = 120, D = 120	0,412	25
MCC004AB12		2,5 - 4		0,352	
MCC005AB12		4 - 6		0,352	

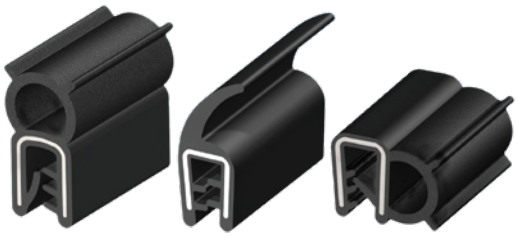

Self-gripping sealing profile with a black EPDM rubber carrier and a sealing lip and / or sealing tube from sponge-rubber. Integrated steel strip core or steel wire core.

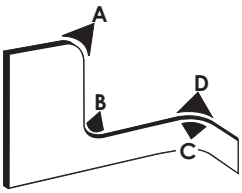

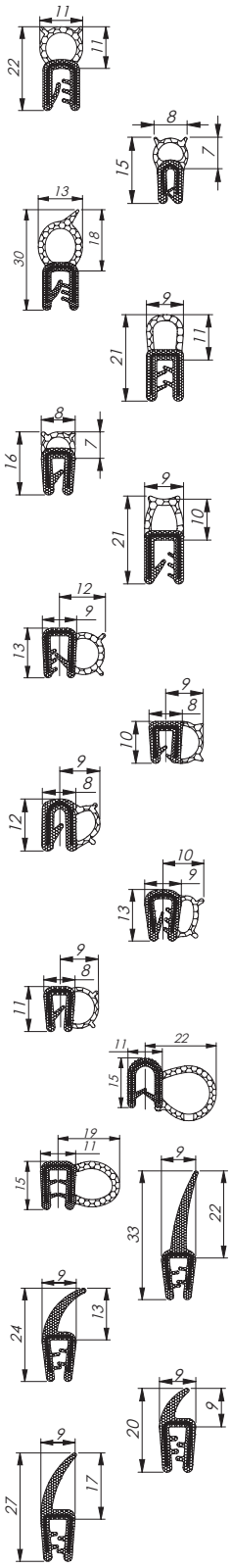

Order code	Color	Clamping range (mm)	The minimum bending radius	Weight (kg/m)	Package (m)
MCC014AB12	black	1 - 3	A = 50, B = 180, C = 30, D = 30	0,145	100
MCC017AB12	black	0,5 - 1,5	A = 50, B = 80, C = 25, D = 25	0,089	100
MCC019AB12	black	1 - 2,5	A = 100, B = 180, C = 25, D = 25	0,17	100
MCC020AB12		2,5 - 4		0,2	100
MCC021AB12	black	1 - 2,5	A = 60, B = 120, C = 25, D = 25	0,19	100
MCC023AB12	black	1 - 2	A = 50, B = 60, C = 20, D = 20	0,14	100
MCC024AB12	black	1 - 3	A = 50, B = 200, C = 25, D = 25	0,14	50
MCB019AB12	black	2	A = 50, B = 20, C = 120, D = 40	0,1293	100
MCB022AB12	black	1 - 2,5	A = 20, B = 50, C = 20, D = 60	0,1	100
MCB025AB12	black	0,8 - 2,5	A = 40, B = 40, C = 100, D = 60	0,13	100
MCB026AB12	black	2	A = 30, B = 40, C = 30, D = 60	0,13	100
MCB032AB12	black	1 - 2	A = 100, B = 200, C = 100, D = 60	0,113	100
MCB021AB12	black	1 - 3,5	A = 200, B = 80, C = 200, D = 200	0,265	50
MCB030AB12	black	1,5 - 3	A = 80, B = 60, C = 200, D = 80	0,182	4 x 25
MCC016AB12	black	1 - 2,5	A = 150, B = 250, C = 20, D = 20	0,176	50
MCC018AB12	black	1 - 2,5	A = 60, B = 250, C = 25, D = 70	0,18	3 x 50
MCC022AB12	black	1 - 2	A = 60, B = 200, C = 20, D = 20	0,184	100
MCC025AB12	black	1 - 3	A = 80, B = 250, C = 25, D = 60	0,184	100

Sealing profiles for various purposes

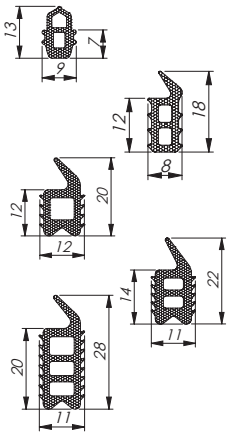

Clamping profiles for grooves, metal U-profiles and similar.

Order code	Color	Material	Weight (kg/m)	Package (m)
MCD001AB12	black	EPDM	0,265	200
MCD002AB12	black	EPDM	0,08	100
MCD003AB12	black	PVC	0,102	140
MCD004AB12	black	PVC	0,135	140
MCD005AB12	black	PVC	0,2	100

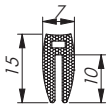

Sealing profile - self gripping or for gluing

Order code	Color	Material	Clamping range (mm)	Weight (kg/m)	Coil size (m)
MCD008AB12	black	EPDM	1 - 2	0,07	50

Look more about materials at Comparison of materials on page 104.

Self-adhesive profiles

Self-adhesive profile made of EPDM cellular rubber with closed cells.

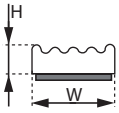

Order code	Description	Color	Dim. W x H	Weight (kg/m)	Coil size (m)	Package (m)
MCE006AB12	E-profile	black	9 x 4 mm	0,018	125	750
MCE008AB12	E-profile	black	10 x 4 mm	0,019	100	600
MCE013AB12	E-profile	black	15 x 4 mm	0,0253	100	600
MCE016AB12	E-profile	black	20 x 4 mm	0,037	50	300

Sealing profiles

Sealing profile of EPDM foam with self-adhesive backing, providing a good grip.

Order code	Description	Color	Material	W x H (mm)	Weight (kg/m)	Coil size (m)	Package (m)
MCE018AW12	D-profile, self-adhesive	White	EPDM	9 x 7,5	0,0131	100	600
MCE019AB12	D-profile, self-adhesive	Black	EPDM	9 x 7,5	0,012	100	600
MCE021AB12	D-profile, self-adhesive	Black	EPDM	12 x 10	0,026	100	600
MCE020AB12	D-profile, self-adhesive	Black	EPDM	14 x 12	0,0294	50	300

Look more about materials at Comparison of materials on page 104.

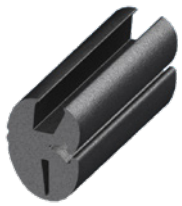

Glazing profile for easy and firm mounting of windows, panels, etc. Use together with filler profile. This glass sealing profile is shown with the glass-groove (A) facing upwards and the frame-groove (B) facing downwards. The stated bending radius is the minimum practical bending radius.

Material: EPDM, black.

Measurements in columns A to F are stated in millimeters (mm).

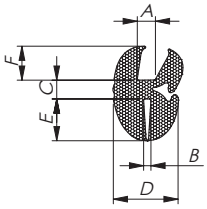

Order code	Bending radius (mm)	Size	A	B	C	D	E	F	Weight (kg/m)	Package (m)
MCG001AB12	35	For filler profile 2	4	1,5	4	13,6	5	6	0,165	25
MCG002AB12	80	For filler profile 3	4	3	7	16	7	7	0,23	20
MCG003AB12	100	For filler profile 3	5	2	5	15	6	6	0,35	50
MCG004AB12	80	For filler profile 3	2,5	1,5	7	16	7	7	0,3	15
MCG005AB12	100	For filler profile 3	2,5	4,5	7	17,8	10,5	11,5	0,34	32
MCG006AB12	20	For filler profile 1	3	2	4	10,2	3	3	0,095	50
MCG007AB12	35	For filler profile 2	3	1	4	11,6	4,5	6	0,145	20
MCG008AB12	80	For filler profile 3	4	1,5	7	16	7	7	0,27	20
MCG009AB12	100	For filler profile 3	4	2	7,3	18	11	8,7	0,405	15
MCG010AB12	35	For filler profile 2	4	3	4	12,6	5	6	0,15	25
MCG011AB12	80	For filler profile 3	4,5	5	7	16	7	7	0,3	25
MCG012AB12	90	For filler profile 3	5	3	7	19	8	8	0,345	20
MCG013AB12	90	For filler profile 3	6	2,5	7	19	8	8	0,35	20
MCG014AB12	120	For filler profile 3	10	3	7,5	23	12,5	9,5	0,6	15

Filler profiles

The filler profiles are used together with the glazing profiles. Choose matching sizes for a proper fit.

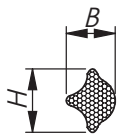

Order code	Description	Color	Material	B	H	Size	Weight (kg/m)	Package (m)
MCF001AB12	Filler	Black	EPDM	6	7	2	0,028	50
MCF002AB12	Filler	Black	EPDM	7,5	9,5	3	0,05	50
MCF003AB12	Filler	Black	EPDM	4,5	5,5	1	0,018	50

Look more about materials at Comparison of materials on page 104.

Cable entry plates

Fast and easy
assembly

Dual sealing
according to IP65/66

UL94V-0 flame resistant
options available

Cable entry plates MC (IP66/67)

• MC (IP66/67) cable entry plates are designed for route and seal cables without connectors
• The assembly of the MC (IP66/67) with cables or pneumatic hoses can be done quick and easy. Simply make a small hole in the thin membrane and push the cables through
• Suitable for standard cut-outs for FL21. For screwing in place

Advantages

• Fast and easy assembly
• High cable density
• Dual cable sealing with IP66/IP67
• Excellent IP protection when cables are bent
• Screw mounting
• Suitable for both indoor and outdoor use

Technical specifications

• IP rating: IP66 and IP67
• Material: Thermoplastic elastomer
• Material base frame: Metal reinforcement electroplated steel
• Colour: Black or Grey (RAL7035)
• Flame class: UL94-V0, self-extinguishing option available
• Temperature: -40 °C...+100 °C
• Properties: Halogen free, Silicone free
• Mounting type: Screw type mounting
• Diam. of screw holes: 9,5 mm

Description	Package (pcs)	MC 3/7 (IP66/67)	MC 25/27 (IP66/67)	MC 35/37 (IP66/67)
Light Grey RAL 7035 4 plastic pins included	40	MBA1C07G11	MBA1C27G11	MBA1C37G11
Light Grey RAL 7035 UL 94 V-0 approved	60	MBA1N07X11	MBA1N27X11	MBA1N37X11
Black UL 94 V-0 approved	60	MBA1N07B11	MBA1N27B11	MBA1N37B11

Technical data

Service temperature	-40 to + 100 °C	-40 to + 100 °C	-40 to + 100 °C
Dimensions height C (mm)	76	43	43
Number of cables (pcs) x cable diameter (mm)	4 x 8 - 16 2 x 24 - 54 1 x 30 - 60 - -	4 x 5 - 7 4 x 8 - 12 13 x 10 - 14 4 x 14 - 20 2 x 20 - 26	4 x 6 - 10 14 x 8 - 12 16 x 10 - 14 2 x 12 - 18 1 x 17 - 32
Total number of cables	7	27	37
Mounting hole size	C - FL 21	C - FL 21	C - FL 21
Weight (g)	206	229	233

Look more about materials at Comparison of materials on page 104.

Dimensions of cable entry plates and mounting hole

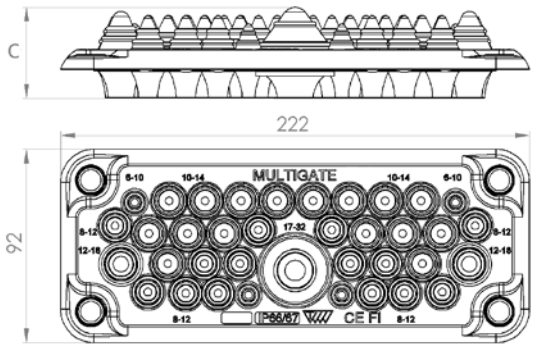

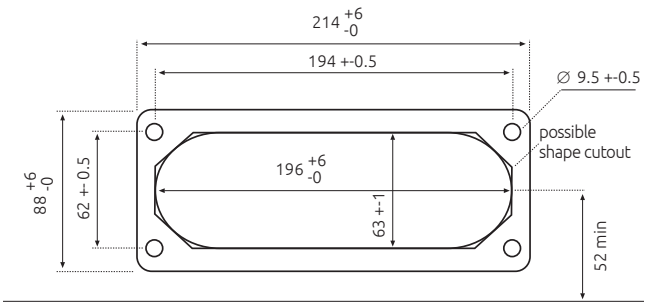

FL 21

Cable entry plates MC (IP65)

MOREK

• MC (IP65) cable entry plates are designed for route and seal cables without connectors
• The assembly of the MC (IP65) with cables or pneumatic hoses can be done quick and easy. Simply make a small hole in the thin membrane and push the cables through
• Suitable for standard cut-outs for FL21. For crewing in place

Advantages

• Fast and easy assembly
• High cable density
• Dual cable sealing with IP65
• Hygienic design - free of dirt-collecting recesses
• Screw mounting
• Suitable for both indoor and outdoor use

Technical specifications

• IP rating: IP65
• Material: Thermoplastic elastomer
• Material base frame: Metal reinforcement electroplated steel
• Colour: Black or Grey (RAL7035)
• Flame class: UL94-V0, self-extinguishing option available
• Oil-resistant option available
• Temperature: -40 °C...+100 °C
• Properties: Halogen free, Silicone free
• Mounting type: Screw type mounting
• Diam. of screw holes: 9,5 mm

	MC 3 (IP65)	MC 25 (IP65)	MC 35 (IP65)
Light Grey RAL 7035 4 plastic pins included	MBA1F03L11	MBA1F25L11	MBA1F35L11
Black	MBA1N03A11	MBA1N25A11	MBA1N35A11
Black, V-0, oil-resistant	MBA1N03B11	MBA1N25B11	MBA1N35B11
Black, EMC tested	–	MBA1T25B11	MBA1T35B11
Technical data			
Service temperature	-40 to + 100° C	-40 to + 100° C	-40 to + 100° C
Dimensions (mm)	214 x 82	216 x 84	216 x 84
Number of cables (pcs) x cable diameter (mm)	4 x 8 - 12 (IP54) 2 x 24 - 54 (IP65) 1 x 30 - 60 (IP65) - -	4 x 5 - 7 4 x 8 - 12 12 x 10 - 14 4 x 14 - 20 1 x 20 - 26	2 x 6 - 10 14 x 7 - 12 16 x 10 - 14 2 x 12 - 18 1 x 17 - 32
Total number of cables	7	25	35
Mounting hole size	C - FL 21	C - FL 21	C - FL 21
Weight (g)	199	230	220
Package (pcs)	100	100	100

Look more about materials at Comparison of materials on page 104.

Dimensions of cable entry plates and mounting hole

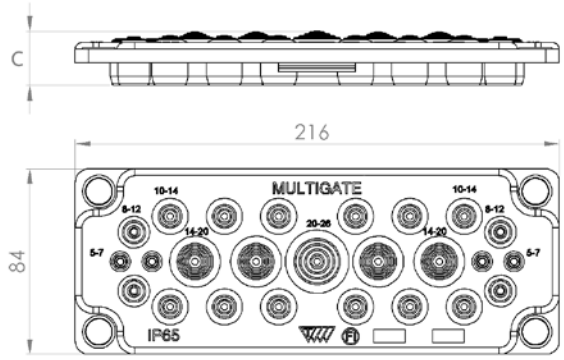

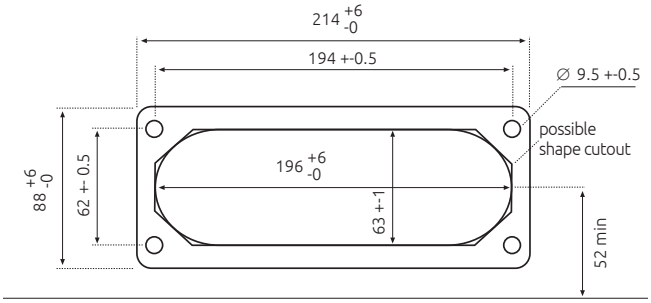

FL 21

Cable entry plate MC 4 (IP65)

MC 4 (IP65)

• MC 4 (IP65) cable entry plates are designed for route and seal cables without connectors
• The assembly of the MC 4 (IP65) with cables or pneumatic hoses can be done quick and easy. Simply make a small hole in the thin membrane and push the cables through

Advantages

• Fast and easy assembly
• High cable density
• Dual cable sealing with IP65
• Hygienic design - free of dirt-collecting recesses
• Screw mounting
• Suitable for both indoor and outdoor use

Technical specifications

• IP rating: IP65
• Material: Thermoplastic elastomer
• Material base frame: Metal reinforcement stainless steel
• Colour: Black
• Flame class: UL94-V0, self-extinguishing option available
• Oil-resistant option available
• Temperature: -40 °C...+100 °C
• Properties: Halogen free, Silicone free
• Mounting type: Screw type mounting
• Diam. of screw holes: 9,5 mm

NEW

Elimination of eddy currents

New type of cable entry plate with stainless steel reinforcement to eliminate eddy currents for up to four single core cables!

		MC 4 (IP65)
Black, UL 94 V-0 approved	●	MBA1F04B11

Technical data	
Service temperature	-40 to + 100° C
Number of cables (pcs) x cable diameter (mm)	4 x 30 - 63 mm
Total number of cables	4
Mounting hole size	283 x 68 mm
Weight (g)	258
Package (pcs)	50

Look more about materials at Comparison of materials on page 104.

Dimensions of cable entry plates and mounting hole

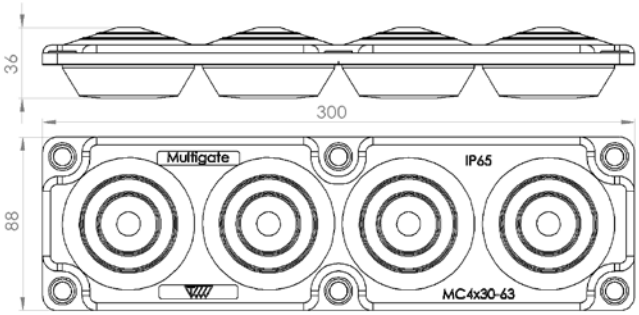

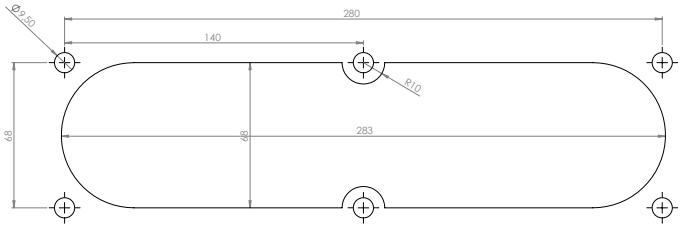

Cable entry plate MC 10 (IP55)

MOREK

• MC 10 (IP55) cable entry plates are designed for route and seal cables without connectors
• The assembly of the MC 10 (IP55) with cables or pneumatic hoses can be done quick and easy. Simply make a small hole in the thin membrane and push the cables through
• Suitable for standard cut-outs for FL21. For screwing in place

Advantages

• Fast and easy assembly
• High cable density
• Excellent IP protection when cables are bent
• Screw mounting
• Suitable for both indoor and outdoor use

Technical specifications

• IP rating: IP55
• Material: Thermoplastic elastomer (TPE)
• Material base frame: glass fibre reinforced polypropylene (PP-GF)
• Colour: Grey (RAL7035)
• Temperature: -40 °C...+100 °C
• Properties: Halogen free, Silicone free
• Mounting type: Screw type mounting
• Diam. of screw holes: 9,5 mm

	MC 10 (IP55)
Light Grey, RAL 7035 UL 94 V-0 approved	MBA1N10X11

Technical data	
Service temperature	-40 to + 100 °C
Number of cables (pcs) x cable diameter (mm)	2 x 7 - 12 8 x 10 - 30
Total number of cables	10
Mounting hole size	C - FL 21
Weight (g)	200
Package (pcs)	100

Look more about materials at Comparison of materials on page 104.

Dimensions of cable entry plates and mounting hole

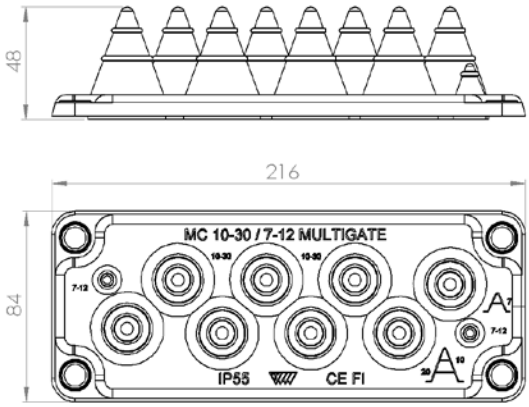

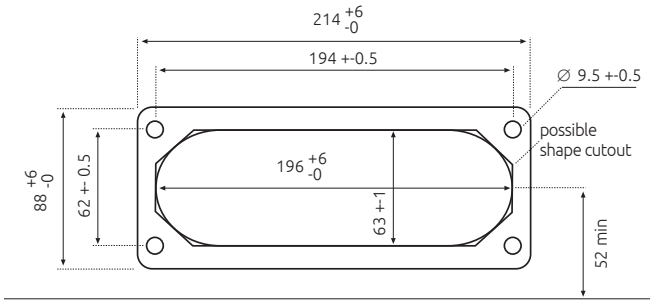

FL 21

Cable entry plates LMC (IP54, 44)

• LMC (IP44, 54) cable entry plates are designed for route and seal cables without connectors
• The assembly of the LMC (IP44, 54) with cables or pneumatic hoses can be done quick and easy. Simply make a small hole in the thin membrane and push the cables through
• Suitable for standard cut-outs for FL21. For screwing in place

Advantages

• Fast and easy assembly
• High cable density
• Excellent IP protection when cables are bent
• Screw mounting
• Suitable for both indoor and outdoor use

Technical specifications

• IP rating: IP44, IP54
• Material: Thermoplastic elastomer
• Material base frame: Metal reinforcement electroplated steel
• Colour: Grey (RAL7035)
• Flame class: UL94-V0, self-extinguishing option available
• Temperature: -40 °C...+90 °C
• Properties: Halogen free, Silicone free
• Mounting type: Screw type mounting
• Diam. of screw holes: 9,5 mm




	LMC 14 (IP54)	LMC 25 (IP54)	LMC 51 (IP54)	LMC 35 (IP44)
Light Grey RAL 7035 4 plastic pins included	MBA3F14L11	MBA3F25L11	MBA3F51L11	MBA3F35L11
Light Grey RAL 7035 UL 94 V-0 approved	MBA3N14X11	MBA3N25X11	MBA3N51X11	–

Technical data

Service temperature	-40 to + 100 °C	-40 to + 100 °C	-40 to + 100 °C	-40 to + 100 °C
Number of cables (pcs) x cable diameter (mm)	5 x 10 - 14 4 x 14 - 18 3 x 14 - 22 2 x 24 - 54 -	2 x 3.5 - 11 5 x 10 - 14 12 x 14 - 18 5 x 14 - 22 1 x 14 - 35	50 x 7 - 13 1 x 15 - 25 - - -	1 x 15 - 32 2 x 12 - 18 16 x 10 - 14 14 x 7 - 12 2 x 6 - 10
Total number of cables	14	25	51	35
Mounting hole size	C - FL 21	C - FL 21	C - FL 21	C - FL 21
Weight (g)	199	201	205	220
Package (pcs)	100	100	100	100

Look more about materials at Comparison of materials on page 104.

Dimensions of cable entry plates and mounting hole

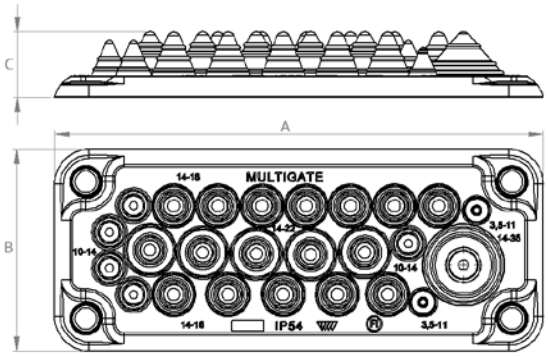

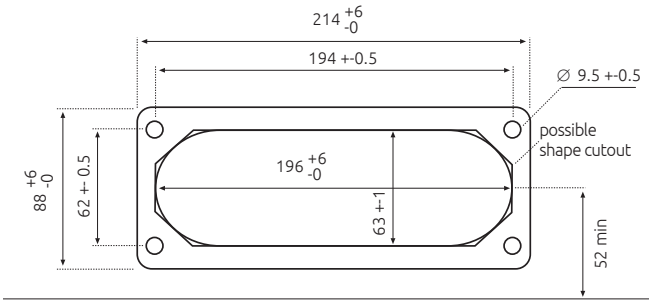

FL 21

Type	Length (A)	Width (B)	Height (C)
LMC (IP44, 54)			
LMC 14 (IP54)	222	92	30
LMC 25 (IP54)	222	92	30
LMC 51(IP54)	222	92	30
LMC 35 (IP44)	214	84	9,5

Cable entry plate MC 16 (IP54)

MOREK

• MC 16 (IP54) cable entry plates are designed for route and seal cables without connectors
• The assembly of the MC 16 (IP54)with cables or pneumatic hoses can be done quick and easy. Simply make a small hole in the thin membrane and push the cables through
• MC 16 can be used by two different ways. When the cable entry plate is used "facade" up, it works as a regular IP54 enclosure cable gland plate. When the cable entry plate is used reversed it functions as a piping grommet in dry space switchboards. Pipes lock securely to the seal in the gland plate by the friction of the elastic material
• Suitable for standard cut-outs for FL21. For screwing in place

Advantages

• Fast and easy assembly
• High cable density
• Excellent IP protection when cables are bent
• Screw mounting
• Suitable for both indoor and outdoor use

Technical specifications

• IP rating: IP55
• Material: Thermoplastic elastomer (TPE)
• Material base frame: glass fibre reinforced polypropylene (PP-GF)
• Colour: Grey (RAL7035)
• Temperature: -40°C...+100°C
• Properties: Halogen free, Silicone free
• Mounting type: Screw type mounting
• Diam. of screw holes: 9,5 mm

	MC 16 (IP54)
Light Grey, RAL 7035 4 plastic pins included	MBA1C16L11

Technical data	
Service temperature	-40 to + 100 °C
Number of cables (pcs) x cable diameter (mm)	15 x 10 - 20 1 x 10 - 30
Total number of cables	16
Mounting hole size	C - FL 21
Weight (g)	120
Package (pcs)	80

Look more about materials at Comparison of materials on page 104.

Dimensions of cable entry plates and mounting hole

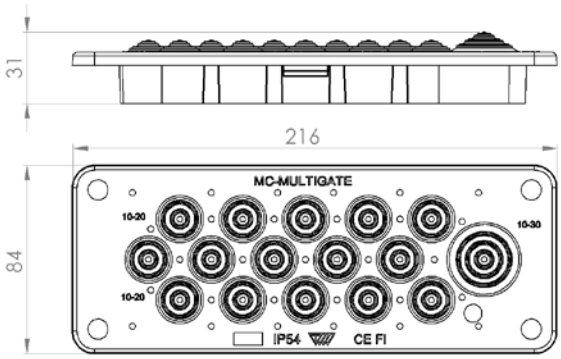

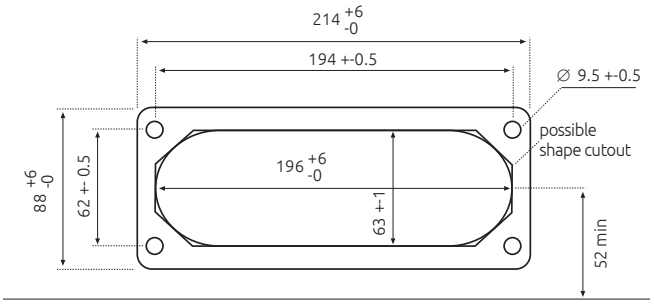

FL 21

Cable entry plates MB (IP55, 66/67)

• MB (IP55, 66/67) cable entry plates are designed for route and seal cables without connectors
• The assembly of the MB (IP55, 66/67) with cables or pneumatic hoses can be done quick and easy. Simply make a small hole in the thin membrane and push the cables through
• Suitable for standard cut-outs for FL13. For screwing in place

Advantages

• Fast and easy assembly
• High cable density
• Dual cable sealing with IP66/IP67
• Excellent IP protection when cables are bent
• Screw mounting
• Suitable for both indoor and outdoor use

Technical specifications

• IP rating: IP55, IP66 and IP67
• Material: Thermoplastic elastomer
• Material base frame: Metal reinforcement electroplated steel
• Colour: White or Grey (RAL7035)
• Flame class: UL94-V0, self-extinguishing option available
• Temperature: -40°C...+100°C
• Properties: Halogen free, Silicone free
• Mounting type: Screw type mounting
• Diam. of screw holes: 7 mm

	MB 4/10 (IP55)*	MB 5/11 (IP66/67)*
Light Grey RAL 7035	-	MBA2N11L11
Light Grey RAL 7035 UL 94 V-0 approved	MBA2N10W11	MBA2N11X11
White UL 94 V-0 approved	MBA2N12W11	-

Technical data

Service temperature	-40 to + 100 °C	-40 to + 100 °C
Number of cables (pcs) x cable diameter (mm)	4 x 10 - 25 6 x 4 - 9 - -	4 x 5 - 7 3 x 7 - 10 2 x 10 - 14 2 x 15 - 30
Total number of cables	10	11
Mounting hole size	B - FL 13	B - FL 13
Weight (g)	68	86
Package (pcs)	200	200

** for the smaller mounting hole (size B)*
Look more about materials at Comparison of materials on page 104.

Dimensions of cable entry plates and mounting hole

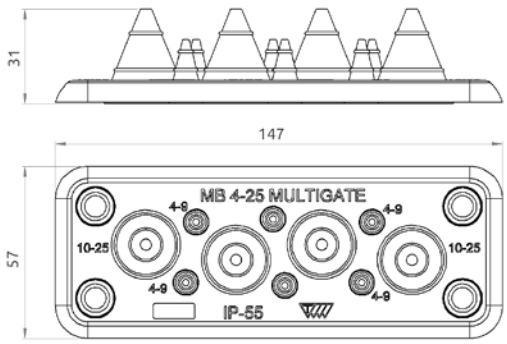

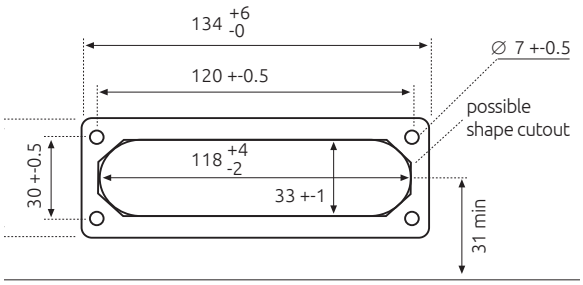

FL 13

Type	Length (A)	Width (B)	Height (C)
MB (IP55, 66/67)			
MB 4/10 (IP55)	138	948	32
MB 5/11 (IP66/67)	147	57	42

Cable entry plates MHF (IP65)

MOREK

Plastic reinforced cable gland suitable for leading through cables and various types of tubing. It matches the cut out dimensions of 16-pole standard industrial connectors. No separate gasket is needed.
This Multigate gives total protection against ingress of dust and against water splashed from all directions. It is suitable for both indoor and outdoor use. IP classification is IP65, and the materials are fire retardant and halogen free.

Advantages

- Fast and easy assembly
- High cable density
- Dual cable sealing with IP65
- Hygienic design - free of dirt-collecting recesses
- Screw mounting
- Suitable for both indoor and outdoor use

Technical specifications

- IP rating: IP65
- Material: Thermoplastic elastomer
- Material base frame: Glass fibre reinforced polypropylene
- Colour: Black or Grey (RAL7035)
- Flame class: UL94-V0, self-extinguishing
- Temperature: -40 °C...+90 °C
- Properties: Halogen free, Silicone free
- Mounting type: Screw type mounting
- Diam. of screw holes: 4,2 mm

NEW

NEW

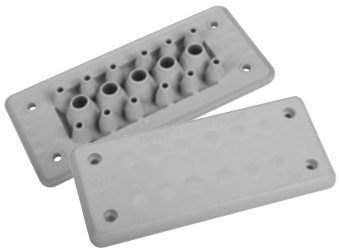

NEW

	MH 10 F 12-1 (IP65)	MH 16 F 17-1 (IP65)	MH 24 F 17-2 (IP65)
Grey	MBA8N12X10	MBA8N17X16	MBA8N17X24
Black	MBA8N12B10	MBA8N17B16	MBA8N17B24
Technical data			
Number of cables (pcs) x cable diameter (mm)	5 x 3 - 7 4 x 5 - 10 2 x 7 - 13 1 x 9 - 16	12 x 3 - 7 5 x 7 - 13	6 x 3 - 7 6 x 5 - 10 5 x 9 - 16
Total number of cables	12	17	17
Classification	UL 94 V-0	UL 94 V-0	UL 94 V-0
Weight (g)	48	59	64
Package (pcs)	100	100	100

Look more about materials at Comparison of materials on page 104.

Dimensions of cable entry plates and mounting hole

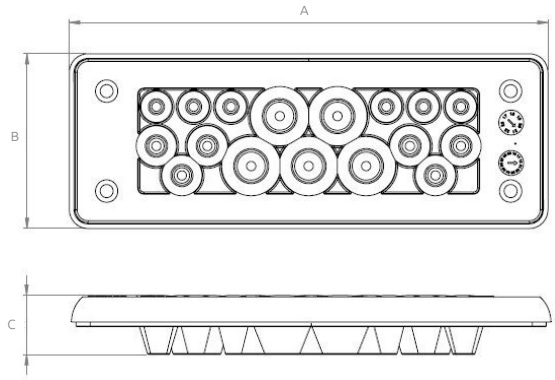

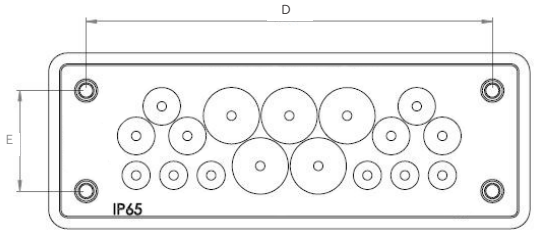

Type	Length (A)	Width (B)	Height (C)	Length 1 (D)	Height 2 (E)
Cable entry plates MHF (IP65)					
MH 10 F 12-1 (IP65)	107	56	18,5	83	32
MH 16 F 17-1 (IP65)	127	56	18,5	103	32
MH 24 F 17-2 (IP65)	154	56	19	130	32

Cable entry plates MHF (IP65)

Plastic reinforced cable gland suitable for leading through cables and various types of tubing. It matches the cut out dimensions of 24-pole standard industrial connectors. No separate gasket is needed.
This Multigate gives total protection against ingress of dust and against water splashed from all directions. It is suitable for both indoor and outdoor use. IP classification is IP65, and the materials are fire retardant and halogen free.

Advantages

- Fast and easy assembly
- High cable density
- Dual cable sealing with IP65
- Hygienic design - free of dirt-collecting recesses
- Screw mounting
- Suitable for both indoor and outdoor use

Technical specifications

- IP rating: IP65
- Material: Thermoplastic elastomer
- Material base frame: Glass fibre reinforced polypropylene
- Colour: Black or Grey (RAL7035)
- Flame class: UL94-V0, self-extinguishing
- Temperature: -40 °C...+90 °C
- Properties: Halogen free, Silicone free
- Mounting type: Screw type mounting
- Diam. of screw holes: 4,2 mm

NEW

NEW

	MH 24 F 17-3 (IP65)	MH 24 F 30-1 (IP65)
Grey	MBA8N17X10	MBA8N30X10
Black	MBA8N17B10	MBA8N30B10
Technical data		
Dimensions (mm)	154 x 56	154 x 56
Number of cables (pcs) x cable diameter (mm)	4 x 3 - 7 12 x 7 - 12 1 x 10 - 20	30 x 3 - 8
Total number of cables	17	30
Classification	UL 94 V-0	UL 94 V-0
Weight (g)	59	71
Package (pcs)	100	100

Look more about materials at Comparison of materials on page 104.

Dimensions of cable entry plates and mounting hole

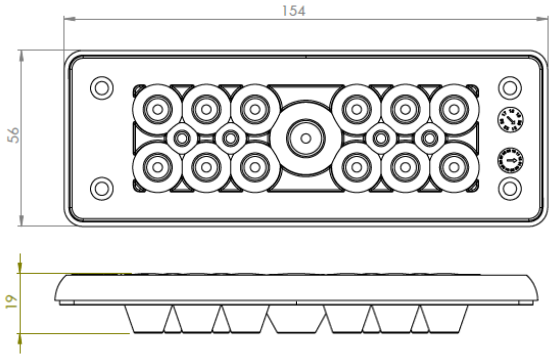

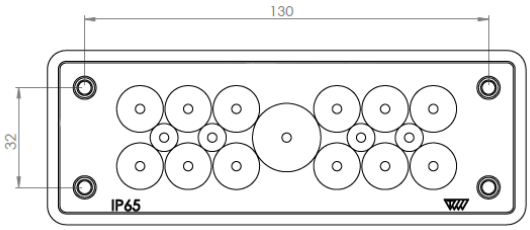

Cable entry plates MHF (IP65)

MOREK

Plastic reinforced cable gland suitable for leading through cables and various types of tubing. It matches the cut out dimensions of 24-pole standard industrial connectors. No separate gasket is needed.
This Multigate gives total protection against ingress of dust and against water splashed from all directions. It is suitable for both indoor and outdoor use. IP classification is IP65, and the materials are fire retardant and halogen free.

Advantages

- Fast and easy assembly
- High cable density
- Dual cable sealing with IP65
- Hygienic design - free of dirt-collecting recesses
- Screw mounting
- Suitable for both indoor and outdoor use

Technical specifications

- IP rating: IP65
- Material: Thermoplastic elastomer
- Material base frame: Glass fibre reinforced polypropylene
- Colour: Black or Grey (RAL7035)
- Flame class: UL94-V0, self-extinguishing
- Temperature: -40 °C...+90 °C
- Properties: Halogen free, Silicone free
- Mounting type: Screw type mounting
- Diam. of screw holes: 4,2 mm

NEW

MH 24 F 22-1 (IP65)

NEW

MH 24 F 27-1 (IP65)

Grey	MBA8N22X24	MBA8N27X24
Black	MBA8N22B24	MBA8N27B24

Technical data		
Dimensions (mm)	154 x 56	154 x 56
Number of cables (pcs) x cable diameter (mm)	15 x 3 - 7 4 x 4,5 - 10 3 x 15 - 20	12 x 3 - 7 10 x 4,5 - 10 5 x 7 - 13
Total number of cables	22	27
Classification	UL 94 V-0	UL 94 V-0
Weight (g)	65	70
Package (pcs)	100	100

Look more about materials at Comparison of materials on page 104.

Dimensions of cable entry plates and mounting hole

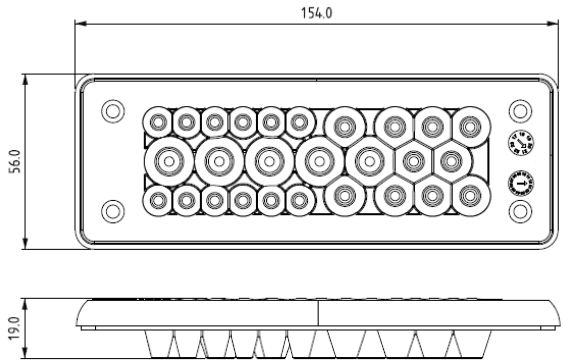

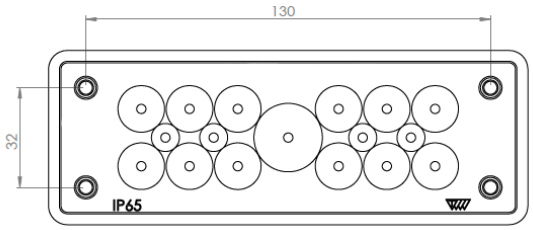

Cable entry plate RMC (IP65)

Patent-pending solution

Very quick, precise
and easy way
to insert cables

No need to use cutting, pliers, knives or other tools

UL94 V-0 CE RoHS IP65 MADE IN EU

Cable entry plate RMC (IP65)

MOREK

• Cable gland plate used as a conductor entry point in an electrical cabinet; the enclosure wall thickness can vary from 1 to 4 mm
• For use with diverse cable sizes in both low and medium voltage power applications
• Suitable for rough industrial conditions indoors as well as extreme climatic conditions outdoors

Advantages

• Each cable entry point has a tab that can be peeled off to create an opening for quick insertion and pull-through operations without the need for cutting pliers, knives or other tools
• Pre-embossed, circular entry points guarantee a precise, clean and robust seal around the cable; no additional glands or gaskets required
• A high density of incoming/outgoing conductors can be installed with minimal space requirements

Technical specifications

• Feed-through membrane made of thermoplastic elastomer (TPE) with polypropylene glass fiber reinforcement (PP-GF)
• Cable entry points with various cross-sectional diameters (no pre-attached connectors)
• Available in two colors: black and light grey (RAL7035)
• Designed to match an FL21 flange size cut-out
• Standard M8 bolts used for mounting on the enclosure wall (bolts not included in package)
• High IP65 protection against the ingress of dust and water
• Flammability rating according to UL 94 V-0
• Operational ambient temperature range (material unstressed): -40 °C...+90 °C

NEW

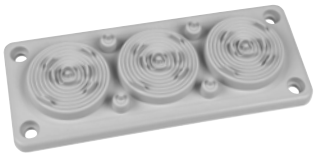

NEW

	RMC 3 (IP65)	RMC 17 (IP65)
Grey (RAL 7035)	MBA9N07X11	MBA1N17X11
Black (RAL 9005)	MBA9N07B11	MBA1N17B11
Technical data		
Number of cables (pcs) x cable diameter (mm)	4 x 7-10 3 x 12-57	4 x 5 -7 2 x 10-12 2 x 12-15 9 x 10-30
Total number of cables	7	17
Dimensions A / B / C (mm)	220 / 88 / 25,5	220 / 88 / 25,5
Classification	UL 94 V-0	UL 94 V-0
Weight (g)	131	134
Package (pcs)	100	100

Look more about materials at Comparison of materials on page 104.

Dimensions

RMC 3

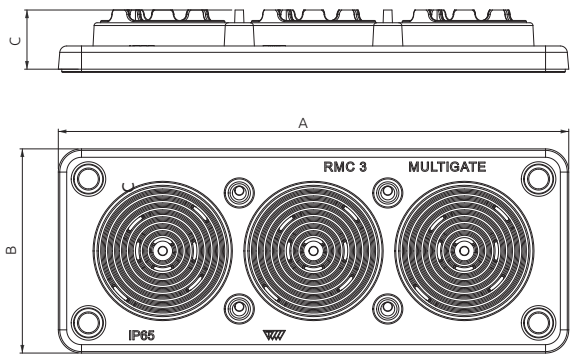

RMC 17

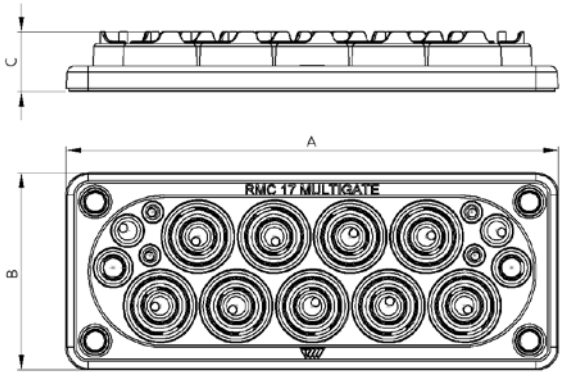

Single grommets T-RGDM (IP64)

- Used as a conductor entry point in an electrical cabinet; the wall thickness can vary from 1-3,5 mm
- For use with diverse cable sizes in both low and medium voltage power applications
- Suitable for rough industrial conditions indoors as well as extreme climatic conditions outdoors

Advantages

- Each RGD has several cable entry points - tabs - that can be peeled off to create an opening for quick insertion and pull-through operations without the need for cutting pliers, knives or other tools
- Each tab has marking of cable diameter matching it written next to it
- Pre-embossed, circular entry points guarantee a precise, clean and robust seal around the cable; no additional glands or gaskets required

Technical specifications

- Made of thermoplastic elastomer (TPE)
- Designed to match M40, M50 and M60 size cut-out and diameter range from 10 to 54 mm:
  - o M40: 10-34 mm cable
  - o M50: 12-44 mm cable
  - o M60: 12-54 mm cable
- Available in two colors: black and light grey (RAL7035)
- High IP64 protection against the ingress of dust and water
- Flammability rating according to UL 94 V-0
- Operational ambient temperature range (material unstressed): -40 °C...+100 °C

NEW

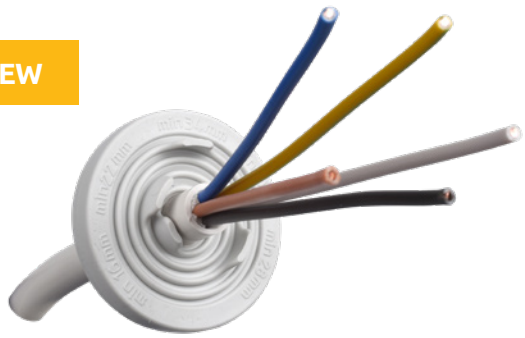

Order code	Type	Cable diameter (mm)	Color	Shade	Classification	Dimensions (mm) A	B	C	D	E	Weight (g)	Package (pcs)
MBB0540X11	T-RGDM 40	10-34	Grey	RAL 7035	UL 94 V-0	34 mm	40 mm	47 mm	16 mm	1,5-3 mm	10	400
MBB0540B11			Black	RAL 9005	UL 94 V-0							
MBB0550X11	T-RGDM 50	12-44	Grey	RAL 7035	UL 94 V-0	44 mm	50 mm	57 mm	16 mm	1,5-3 mm	13,2	250
MBB0550B11			Black	RAL 9005	UL 94 V-0							
MBB0560X11	T-RGDM 60	12-54	Grey	RAL 7035	UL 94 V-0	54 mm	60 mm	67 mm	16 mm	1,5-3 mm	16,4	200
MBB0560B11			Black	RAL 9005	UL 94 V-0							

Look more about materials at Comparison of materials on page 104.

Dimensions

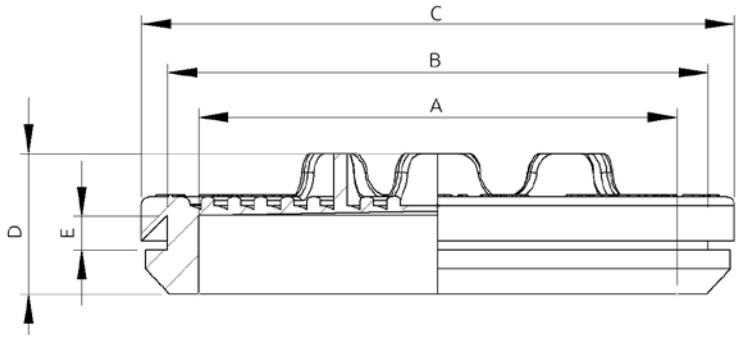

Splitting cable entry plates

Splitting cable entry plates are compact system to route and seal pre-terminated cables

Insertion of pre-terminated cables

UL 94 V-0

Does
not affect warranty
of pre-terminated cables

Splitting cable entry plate for cables with attached connectors

Often with the cables come the connectors and very often the connectors can not be removed and re-attached. The delicate data cables, HDMI´s etc. are difficult or impossible to re-join at site. The splitting cable entry plate is the solution that lets the cables be installed with the connectors and on top of that the cables can be changed as often as wanted. Choose splitting cable entry plate for fast, safe and versatile installations.

Splitting cable entry plates SCG and MC are intended for leading through both low and medium power current cables, but also various kinds of tubing.

Splitting cable entry plates SCG and MC are new type of metal and plastic reinforced cable entry plate made of different types of polymers (TPE and PP-GF).

They meet the requirements of IP55 protection class without the need of any additional gaskets or grommets. This makes it very easy to use and provides many benefits for compact installation unit.

Splitting cable entry plates SCG and MC are suitable for both in- and outdoor application and operating temperature range is from -40 °C to +90 °C.

Look more about materials at Comparison of materials on page 104.

	SCG 1x3-35 (IP55)	MC 1x8-67 (IP55)	MC 1/9 (IP55)
Black UL 94 V-0 ●	MBA4N01B11	MBA4N19B11	MBA4N12B11
Black ●	-	MBA4N18B11	-
Technical data			
Service temperature	-40 - +90	-40 - +90	-40 - +90
Dimensions (A / B / C) (mm)	77 / 60 / 40	123 / 93 / 75	123 / 93 / 75
Number of cables (pcs) x cable diameter (mm)	1 x 3-35	1 x 8-67	2 x 8-11 2 x 10-13 5 x up to 14*
Total number of cables	1	1	9
Mounting hole size	SCG 1	MC 1	MC 1
Weight (g)	160	870	568
Package (pcs)	100	15	20

** Only for cables without connectors*

Dimensions

SCG 1

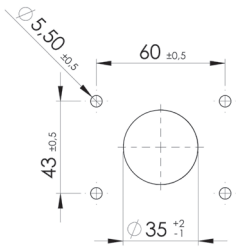

MC 1

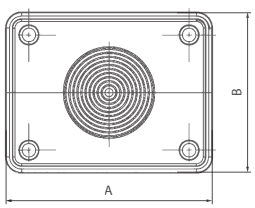

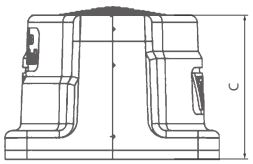

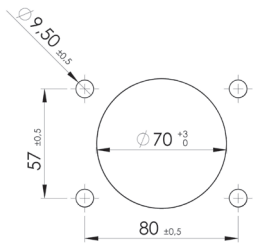

Splitting cable entry plates SCG, MC (IP55)

	SCG 2x3-35 (IP55)	MC 2x8-67 (IP55)	MC 2/10 (IP55)	MC 2/18 (IP55)
Black UL 94 V-0 ●	MBA4N02B11	MBA4N28B11	MBA4N21B11	MBA4N22B11

Technical data

Service temperature	-40 - +90	-40 – +90	-40 – +90	-40 – +90
Dimensions (A / B / C) (mm)	136 / 60 / 40	222 / 93 / 75	222 / 93 / 75	222 / 93 / 75
Number of cables (pcs) x cable diameter (mm)	2 x 3-35	2 x 8-67	1 x 8-67 2 x 8-11 2 x 10-13 5 x up to 14*	4 x 8-11 4 x 10-13 10 x up to 14*
Total number of cables	2	2	10	18
Mounting hole size	SCG 2	MC 2	MC 2	MC 2
Weight (g)	263	870	680	976
Package (pcs)	50	10	10	10

** Only for cables without connector*

Dimensions

SCG 2

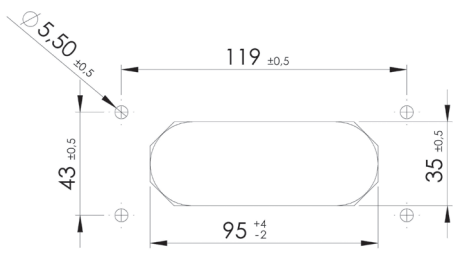

MC 2

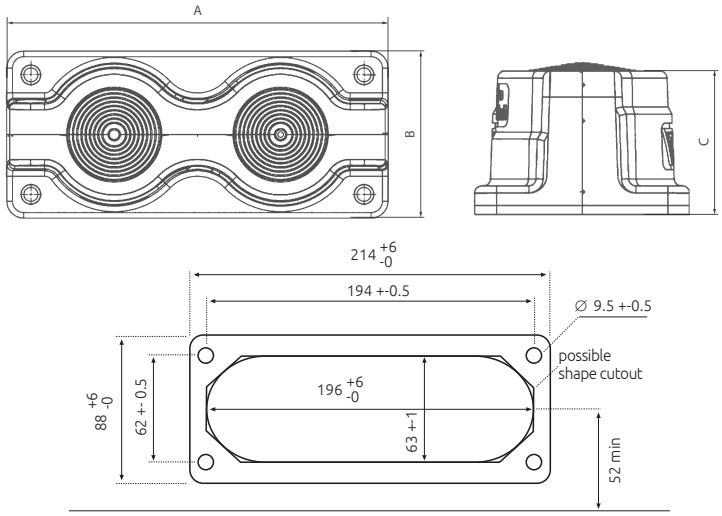

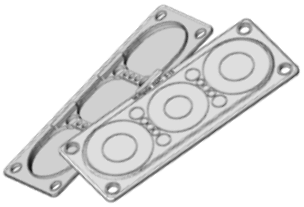
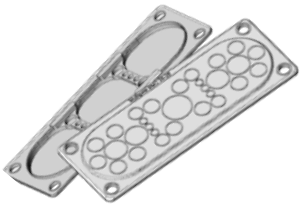
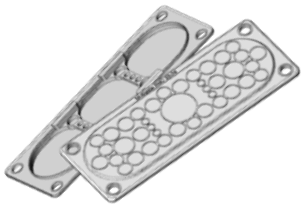

	SMC 3-13	SMC 25-29	SMC 33-39
Light Grey RAL 7035	MBA5N13G11	MBA5N29G11	MBA5N39G11
Technical data			
Dimensions (mm)	214 x 82	214 x 82	214 x 82
Mounting hole size	C - FL 21	C - FL 21	C - FL 21
Weight (g)	55	55	55
Package (pcs)	100	100	100




	SMC 1	ISMC	DIN 108	KWH 1
Light Grey RAL 7035	MBA5N00G11	MBA5N01G11	MLE0108A10	MLE0001A10
Technical data				
Dimensions (mm)	210 x 80	214 x 82	108 x 50	100 x 40
Mounting hole size	C - FL 21	C - FL 21	45 mm	-
Weight (g)	39	32	12	6
Package (pcs)	150	200	120	100

Dimensions

DIN 108

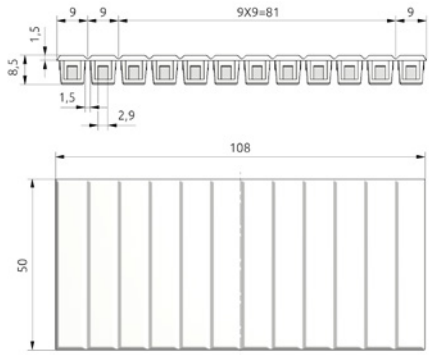

KWH 1

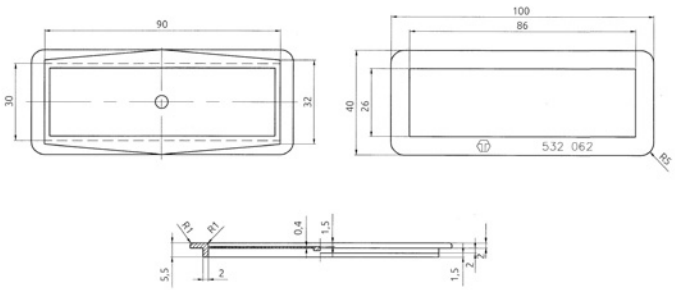

Flanged plates for Rittal AE

Flanged plates for Rittal AE compact enclosures. The flanged plates with Size C (FL 21) cut-outs is designed for compact enclosures of the Rittal AE series. All flanged plates are RAL 7035 powder-coated. Please use the gaskets of the standard plates. Enclosures are supplied with gaskets and screws. We recommend fastening the cable entry systems with a torque of 2,0 Nm.

	Type
MMZ0001A30	Rittal AE size 4: 1xFL21 metal flange
MMZ0002A30	Rittal AE size 5: 2xFL21 metal flange

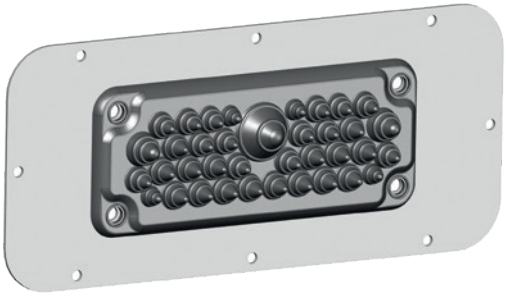

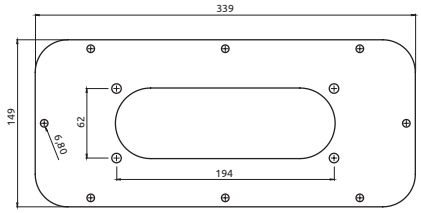

Rittal AE size 4: 1xFL21

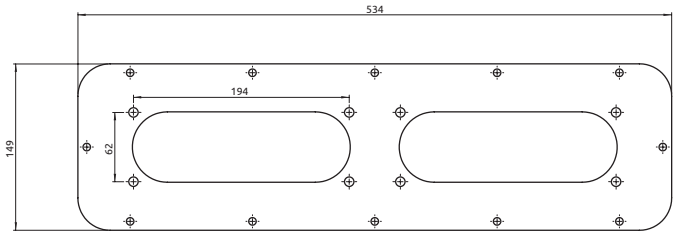

Rittal AE size 5: 2xFL21

Document holders

Document holders are used for storing of documents A4 or A6 (technical documentation, audit report etc.) to metal or plastic cabinets. The holder can be fixated by the double-sided adhesive tape to the cabinet wall. The tape is already prepared on the holder, or it is possible to mount the holder using self-tapping screws (not included), which are pre-punched two oval apertures of 4,2 mm for. The holder is made of a shock-proof plastic (PS) and its offered in grey color (RAL 7035).

A4

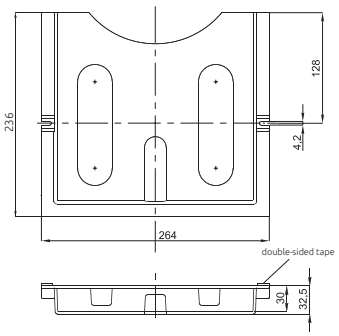

A6

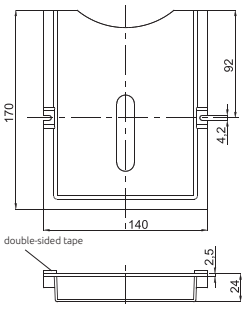

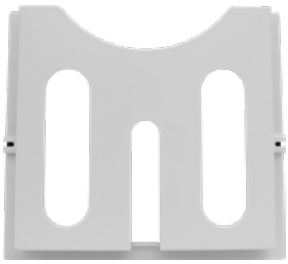

	Holder A4	Holder A6
Grey (RAL 7035) *	MLE0004A26	MLE0006A26

Technical data		
Width / Height / Length (mm)	264 / 236 / 33	140 / 170 / 24
Weight (g)	132	83
Package (pcs)	50	240
Material	PS	PS

** (On request, we can make other colors RAL – min. order quantity 300 pieces)*

Single grommets

Single grommets are cable grommets with various design for leading through both low and medium power current cables as well as various types of tubing. These are suitable for in- and outdoor applications and available for both PG-and mm-openings.

Single grommets are available in many different polymers with different characteristics, such as weather, UV-and ozone resistance, oil resistance and RoHS compliance.

Models T-VET and T-GET are new design which can be used as sealing plug. Both these designs give absolute protection against dust and strong jets of water and also against effects of immersion between 15 cm and 1 m (IP67).

Single grommets T-VET and T-GET are available as standard of TPE-material. As a request also other colors and materials like conductive EMC-material are available.

Single grommets T-VET and T-GET are inspected and certified by SGS Fimko, the Finnish authority in charge of electrical equipment safety standards.

Installation

Make a hole of appropriate size to blind plate or knock-out plate. Avoid rough and sharp edges.

Place the grommet on the hole and pull it firmly to its place.

Make a small hole into the membrane using a screwdriver or cut the top of the cone using side cutters.

Push the cable or tube through the guide hole.

(Back side) Pull the cable or tube back for some 20 mm to lock it.

(Front side) Pull the cable or tube back for some 20 mm to lock it.

Single grommets T-VET PG (IP67)

Single grommets T-VET are designed for leading through both low and medium power current cables and also various types of tubing. Suitable for in- and outdoor applications. They fit to openings made with Dimensions of PG. Model T-VET has a new double seal design where top side of the grommet is closed and therefore it is possible to use it as plug.

Technical specifications

- IP67 total protection against ingress of dust and protection against the effects of immersion between 15,0 cm and 1,0 m
- Made of TPE material
- Flame resistant UL 94 V-0 (look at product table)
- Plate wall thickness between 1 - 4 mm.
- Available for cables with 3 to 35 mm diameter
- Operating temperature from -40 °C to +100 °C

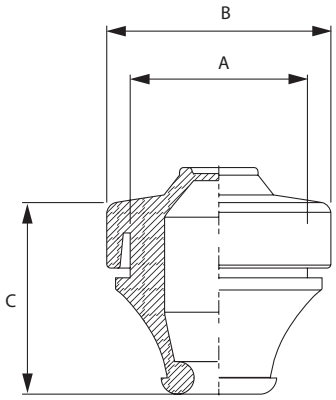

Order code	Cable diameter (mm)	Color	Shade	Classification	Dimensions (mm) A	Dimensions (mm) B	Dimensions (mm) C	Weight (g)	Package (pcs)
MBB0105G11	3 - 5	Grey	RAL 7042		13	20	17	2,7	50
MBB0105X11		Grey	RAL 7035	UL 94 V-0				3,4	
MBB0105B11		Black		UL 94 V-0, oil resistant					
MBB0107G11	5 - 7	Grey	RAL 7042		16	20	19	3,1	50
MBB0107X11		Grey	RAL 7035	UL 94 V-0				3,5	
MBB0107B11		Black		UL 94 V-0, oil resistant					
MBB0110G11	7 - 10	Grey	RAL 7042		19	24	21	4,3	50
MBB0110X11		Grey	RAL 7035	UL 94 V-0				5	
MBB0110B11		Black		UL 94 V-0, oil resistant					
MBB0114G11	10 - 14	Grey	RAL 7042		23	29	23	6,7	50
MBB0114X11		Grey	RAL 7035	UL 94 V-0				7,8	
MBB0114B11		Black		UL 94 V-0, oil resistant					
MBB0120G11	14 - 20	Grey	RAL 7042		29	34	26	8	25
MBB0120X11		Grey	RAL 7035	UL 94 V-0				9,2	
MBB0120B11		Black		UL 94 V-0, oil resistant					
MBB0126G11	20 - 26	Grey	RAL 7042		38	46	30	15	25
MBB0126X11		Grey	RAL 7035	UL 94 V-0				17,4	
MBB0126B11		Black		UL 94 V-0, oil resistant					
MBB0135G11	26 - 35	Grey	RAL 7042		48	57,5	33	25	10
MBB0135X11		Grey	RAL 7035	UL 94 V-0				28	
MBB0135B11		Black		UL 94 V-0, oil resistant					

Look more about materials at Comparison of materials on page 104.

Single grommets T-GET M (IP67)

Single grommets T-GET are for leading through both low and medium power current cables as well various types of tubing. The grommets are suitable for in- and outdoor applications. These grommets fit to openings made with Dimensions of mm. T-GET model has new double seal design where top side of the grommet is closed and therefore it is possible to use it as plug.

Technical specifications

- IP67 total protection against ingress of dust and protection against the effects of immersion between 15,0 cm and 1,0 m
- Made of TPE material
- Flame resistant UL 94 V-0 (look at product table)
- Plate wall thickness between 1 - 5 mm and 1,2 - 5,2 mm.
- Available for cables with 3 to 60 mm diameter
- Operating temperature from -40 °C to +100 °C

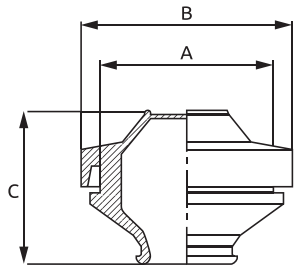

Order code	Cable diameter (mm)	Color	Shade	Classification	Dimensions (mm) A	B	C	Plate thickness (mm)	Weight (g)	Package (pcs)
MBB0305G11	3 - 5	Grey	RAL 7042		12	19	20,9	1 - 5	2,8	50
MBB0305X11		Grey	RAL 7035	UL 94 V-0						
MBB0305B11		Black		UL 94 V-0, oil resistant						
MBB0307G11	5 - 7	Grey	RAL 7042		16	23	21,6	1 - 5	3,2	50
MBB0307X11		Grey	RAL 7035	UL 94 V-0						
MBB0307B11		Black		UL 94 V-0, oil resistant						
MBB0310G11	7 - 10	Grey	RAL 7042		20	27	24,3	1 - 5	4,3	50
MBB0310X11		Grey	RAL 7035	UL 94 V-0						
MBB0310B11		Black		UL 94 V-0, oil resistant						
MBB0314G11	10 - 14	Grey	RAL 7042		25	32	24,8	1 - 5	8	50
MBB0314X11		Grey	RAL 7035	UL 94 V-0						
MBB0314B11		Black		UL 94 V-0, oil resistant						
MBB0320G11	14 - 20	Grey	RAL 7042		32	39	28,1	1 - 5	12	25
MBB0320X11		Grey	RAL 7035	UL 94 V-0						
MBB0320B11		Black		UL 94 V-0, oil resistant						
MBB0326G11	20 - 26	Grey	RAL 7042		40	46	31,8	1 - 5	16,4	25
MBB0326X11		Grey	RAL 7035	UL 94 V-0						
MBB0326B11		Black		UL 94 V-0, oil resistant						
MBB0335G11	26 - 35	Grey	RAL 7042		50	57	39,7	1 - 5	24	10
MBB0335X11		Grey	RAL 7035	UL 94 V-0						
MBB0335B11		Black		UL 94 V-0, oil resistant						
MBB0345G11	30 - 45	Grey	RAL 7042		60	69	59,6	1 - 5	54	5
MBB0345X11		Grey	RAL 7035	UL 94 V-0						
MBB0345B11		Black		UL 94 V-0, oil resistant						
MBB0360B11	40 - 60	Black		UL 94 V-0, oil resistant	80	89	78,2	1,2 - 5,2	110	5

Look more about materials at Comparison of materials on page 104.

Single grommets T-GD, T-GDM (IP54)

MOREK

Single grommets T-GD, T-GDM are for leading through both low and medium power current cables and also various types of tubing. The grommets are suitable for in- and outdoor applications. The T-GD grommets fit to openings made with Dimensions of PG and the T-GDM grommets fit to openings made with metric Dimensions (mm).

Technical specifications

- IP54 protection against dust and water splashed from all directions.
- Made of TPE material
- Flame resistant UL 94 V-0
- Plate wall thickness between 1 - 2 mm and 1,5 - 3 mm.
- Available for cables with 9 to 69 mm diameter
- Operating temperature from -40 °C to +100 °C

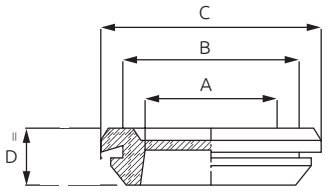

T-GD

Order code	Cable diameter (mm)	Color	Dimensions (mm)				Plate thickness (mm)	Weight (g)	Package (pcs)
			A	B	C	D			
MBB0509B11	9	Black	9	15,5	20	7	1 - 2	2	100
MBB0511B11	11	Black	11	18,5	23	7	1 - 2	3	100
MBB0513B11	13,5	Black	13,5	20,5	25	7	1 - 2	4	100
MBB0516B11	16	Black	16	22,5	28	7	1 - 2	4	100
MBB0521B11	21	Black	21	28	35	9	1 - 2	12	100
MBB0529B11	29	Black	29	37	44	10	1 - 2	16	100
MBB0536B11	36	Black	36	47	54	12	1,5 - 3	17	100
MBB0548B11	48	Black	48	60	68	12	1,5 - 3	54	50
MBB0553B11	53	Black	53	64	75	12	1,5 - 3	110	50
MBB0569B11	69	Black	69	79	90	12	1,5 - 3	110	30

Look more about materials at Comparison of materials on page 104.

T-GDM

Order code	Cable diameter (mm)	Color	Dimensions (mm)				Plate thickness (mm)	Weight (g)	Package (pcs)
			A	B	C	D			
MBB0609B11	9	Black	9	12,2	17	7	1 - 2	2	100
MBB0611B11	11	Black	11	16,2	21	7	1 - 2	3	100
MBB0613B11	13,5	Black	13,5	20,5	25	7	1 - 2	4	100
MBB0616B11	16	Black	16	25,2	31	7	1 - 2	4	100
MBB0621B11	21	Black	21	32,2	40	9	1 - 2	12	100
MBB0629B11	29	Black	29	40,2	48	10	1 - 2	16	100
MBB0636B11	36	Black	36	50,2	58	12	1,5 - 3	17	100
MBB0648B11	48	Black	48	60,2	68	12	1,5 - 3	54	50
MBB0653B11	53	Black	53	70,2	81	12	1,5 - 3	110	50
MBB0669B11	69	Black	69	80,2	91	12	1,5 - 3	110	30

Look more about materials at Comparison of materials on page 104.

Single grommets MGD (IP54)

Single grommets MGD are for leading through both low and medium power current cables as well various types of tubing.
The grommets are made of TPE-S material and are suitable for in- and outdoor applications. The grommets fit to standard M50 opening.

Technical specifications

- IP54 protection against dust and water splashed from all directions.
- Made of EPDM material
- Plate wall thickness between 1 - 2 mm and 1,5 - 3 mm.
- Available for cables with 3 to 16 mm diameter
- Service temperature for unstressed material -40 °C to +100 °C

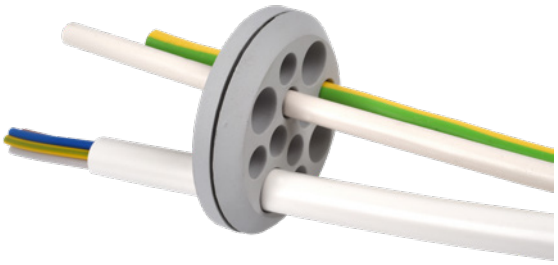

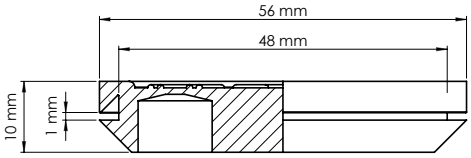

Order code	Color	Cable diameter	Weight (g)	Package (pcs)
MBB0712L11	Light Grey (RAL 7035)	8 x 9 mm & 4 x 13 mm	20	50
MBB0707L11	Light Grey (RAL 7035)	4 x 10 mm & 3 x 16 mm	20	50

Look more about materials at Comparison of materials on page 104.

Single grommets M 20-80

Single grommets M 20-80 are for leading through both low and medium power current cables as well various types of tubing.

Single grommets M 20-80 are an excellent solution for the cables with the higher diameter - up to 80 mm diameter. The grommets are suitable for in- and outdoor applications.

Technical specifications

- Made of TPE material
- Flame resistant UL 94 V-0
- Plate wall thickness 1,5 - 3 mm.
- Available for cables with 20 to 80 mm diameter
- Service temperature for unstressed material -40 °C to +100 °C

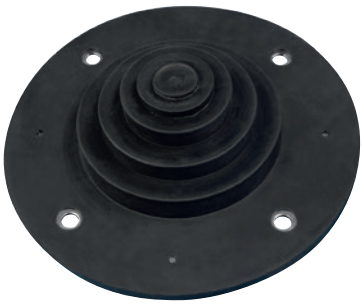

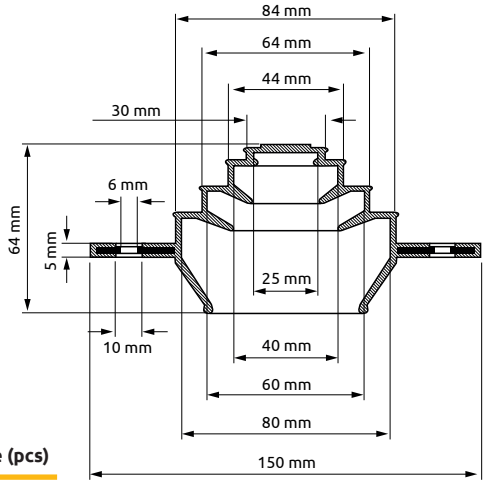

Order code	Color	Classification	Weight (g)	Package (pcs)
MBA6N80G11	Grey (RAL 7042)	-	260	50
MBA6N80X11	Light Grey (RAL 7035)	UL 94 V-0	260	50
MBA6N80B11	Black	UL 94 V-0, Oil resistant	260	50

Look more about materials at Comparison of materials on page 104.

Roof flashings

Sheet-metal roof flashings can effectively seal electrical wires, antennas, air ventilation- and air conditioning pipes, chimneys and similar round inlets coming through sheet-metal roofs.
Around the flashing goes an easily bendable aluminum flange which can be fitted to various shapes of sheet-metal roof surfaces. These roof flashings can be used on a flat or on profiled surface.

Installation instructions

- Choose appropriate size flashing and cut flashing to right pipe diameter with sharp knife, if needed
- Cut flashing approximately 20% smaller than exact pipe diameter
- Slide flashing on pipe or antenna. If needed, shape aluminum flange to fit roof surface profile
- Apply silicon sealant or equivalent between roof and aluminum flange
- Use fasteners to fasten aluminium flange to sheet-metal roof to complete installation
- Mount a stainless clamping collar on top of the flashing to secure

Order code	Cable or pipe diameter (mm)	Color	Dimensions (mm)		Weight (g)	Package (pcs)
			A	B		
MBB7060A11	30-60	Black	125 x 125	55	78	50
MBB7100A11	40-100	Black	165 x 165	77	139	50
MBB7125A11	60-125	Black	205 x 205	85	216	30
MBB7160A11	80-160	Black	245 x 245	105	326	30
MBB7185A11	100-185	Black	285 x 285	118	361	30
MBB7230A11	130-230	Black	325 x 325	135	535	20
MBB7450A11	220-450	Black	Ø 560	195	1293	10

Dimensions

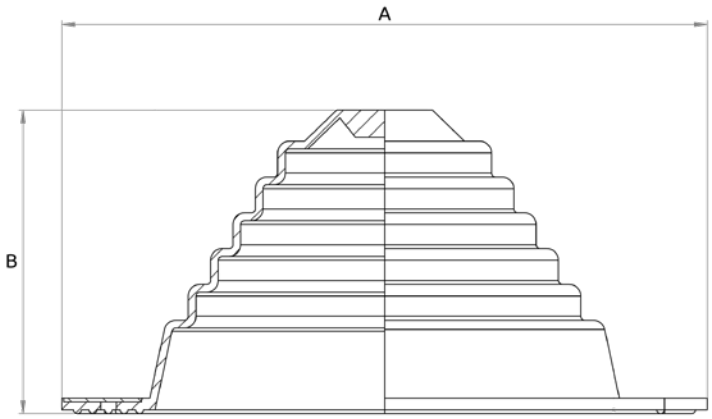

Gel joints Break

Fastest way to make an underground connection!

No expiration date

5 years
warranty

Re-enterable connection

CE RoHS IP68 MADE IN EU

Gel joints Break

Gel joints Break series is suitable to guarantee insulation of low voltage main and shunted, single-pole and multi-pole connections ranging from 0,6/1 kV.

The list of products is made up of a series for main connections and a series for shunted connections. The first series allows single-pole and multi-pole connections with max. section respectively of 1x185 mm² and 4x25 mm²; the second series allows single-pole and multi-pole shunted connections with max. section respectively of 1x120 mm² e 4x10 mm².

The insulation phase in each joint is made with a separator included in the kit or with the innovative modular insulated terminals, up to five phases with max. section of 35 mm².

Technical specifications

- Protection degree IP68
- Operating temperature from -20 °C to +90 °C

Regulations compliance

- EN 50393 (0,6/1 kV)
- EN 60529
- RoHS Directive 2011/65/EC
- 20-37/2-1, 20-37/7
- EN 60695-2-11

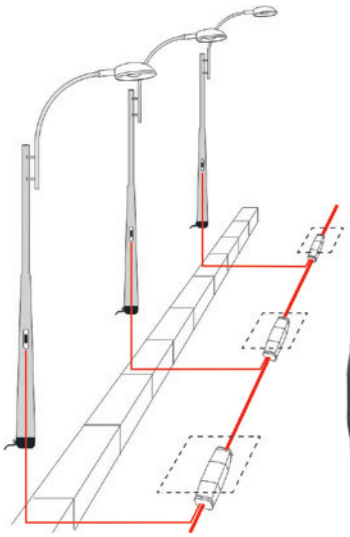

	Break 25	Break 30	Break 50	Break 50Y	Break 100
Order code	MBG0025A24	MBG0030A24	MBG0050A24	MBG0050Y24	MBG0100A24
Dimensions A / B / C (mm)	70 / 42 / 24	100 / 59 / 34	165 / 62 / 36	220 / 100 / 50	180 / 105 / 36
Package (pcs)	4	5	3	1	1

Dimensions

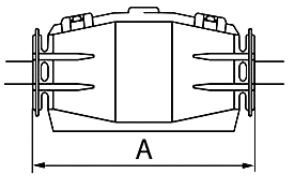

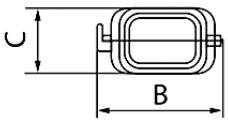

Installation

1. Strip and crimp wires.

2. Dip connection in the gel and block wires at the ends with the included tie-wraps.

3. Verify clip closing and gel overflowing in wire input/output points in order to guarantee a perfect watertight seal.

Components and characteristics

• Two polypropylene hinged shells with patented water tight system, made up of a longitudinal ribbing (1) functioning as the gel containing bulkhead. At both ends there are pre-fractured walls (2) that allow gel overflowing, ensuring a good water tightness.
• Wire slipping is avoided in longitudinal direction thanks to ribbing (3) at the ends of the shells and in transversal direction thanks to wire fixing with tie-wraps included in the package.
• Patented separator made up of two notched plates that allow a reciprocal jointing and two protrusions that block the plates.
• There are two holes at the ends of each model in order to insert and fix tie-wraps. Joint opening can occur only using a tool according to norm CEI 64-8.

Advantages

• Re-enterable connection
• High mechanical strength with wide range of operating temperature
• Fast laying
• Cross-linked gel in the two shells (avoiding additional casting)
• Versatility of application, even in submerged conditions
• High watertight properties
• High dielectric strength
• Non sliding wires
• High strength against chemical agents or UV rays
• No expiration date

Kit content*

• Shell
• Tie-wraps
• Separator

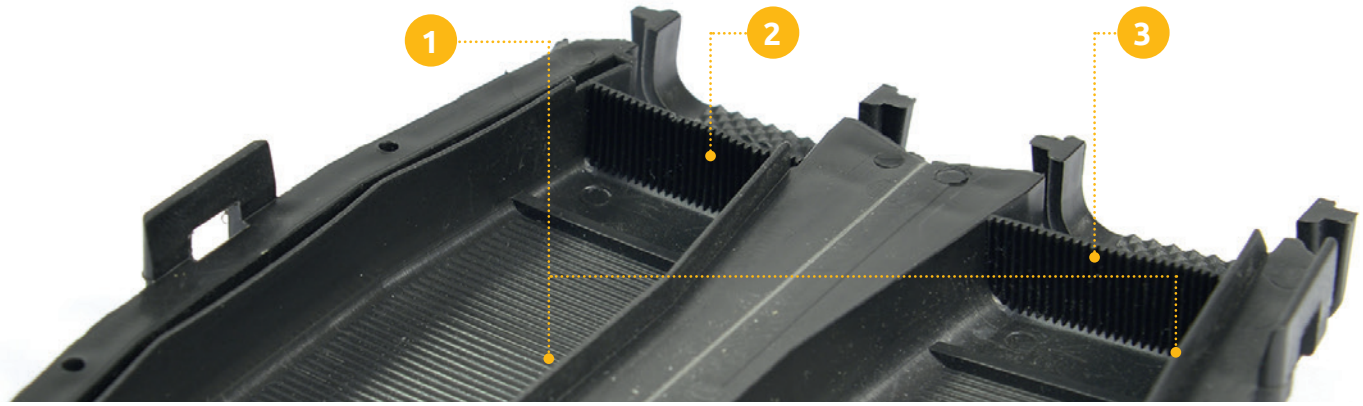

Order code	Type	Connection type	Main (mm²)		Shunted (mm²)		Main (mm²)		Shunted (mm²)		Main (mm²)		Shunted (mm²)		Main (mm²)		Shunted (mm²)	
			Min.	Max.	Min.	Max.	Min.	Max.	Min.	Max.	Min.	Max.	Min.	Max.	Min.	Max.	Min.	Max.
MBG0025A24	Break 25	Main wiring	1,5	25	-	-	-	-	-	-	-	-	-	-	-	-	-	-
		Branching wiring	1,5	25	1,5	10	-	-	-	-	-	-	-	-	-	-	-	-
MBG0030A24	Break 30	Main wiring	1,5	50	-	-	1,5	10	-	-	1,5	4	-	-	1,5	2,5	-	-
		Branching wiring	1,5	50	1,5	35	-	-	-	-	-	-	-	-	-	-	-	-
MBG0050A24	Break 50	Main wiring	10	120	-	-	6	16	-	-	1,5	10	-	-	1,5	10	-	-
		Branching wiring	10	70	1,5	35	1,5	10	1,5	6	1,5	10	1,5	4	1,5	6	1,5	4
MBG0100A24	Break 100	Main wiring	35	185	-	-	16	50	-	-	4	25	-	-	6	25	-	-
		Branching wiring	25	150	10	120	10	35	6	25	4	16	2,5	4	6	16	2,5	10
MBG0050Y24	Break 50Y	Main wiring	-	-	-	-	-	-	-	-	-	-	-	-	-	-	-	-
		Branching wiring	6	70	2,5	50	1,5	25	1,5	16	2,5	16	1,5	10	2,5	16	1,5	10

The range of product is made up of three single-pole models MC 06, MC 16, MC 35 that allow insertion of wires with max sections respectively of 6 mm², 16 mm², 35 mm².
Models with the same section can be assembled in different configurations from two up to five poles. In three- and five-pole combination the result is a pyramidal structure that optimises space utilization, especially in applications of resin and gel joints Break (see on page 98). It is also possible to create models with different sections.

Materials

- Self-extinguishing transparent polycarbonate - insulating case
- Brass CW 614 N – conductive case
- Zinc – plated steel – dowels

Technical specifications

- Operating temperature from -20 ˚C to +90 ˚C
- Rated insulation voltage: 500 V
- Rated current: 24 A (MC 06), 41 A (MC 16), 76 A (MC 35)
- Tightening torque dowels: 0,6 Nm (MC 06), 1,8 Nm (MC 16), 10 Nm (MC 35)
- Inflammability grade according to UL 94 V-2
- Flame and ignition resistance according to IEC 695-2-1
- Compliance with glow wire test 850 ˚C (EN 60695-2-11)

Advantages

- Modular capacity from two up to five poles
- Fast and easy wiring
- Double insulation degree per joints connections
- Fast maintenance
- Re-enterable and reusable connection (needed mostly in joints)
- High protection degree
- Application flexibility
- Reduced space utilization with three- and five-pole pyramid structure

Certification and regulations

- IEC/EN 60695-2-11
- EN 60998-1:2004
- EN 60998-2-1:2004
- RoHS 2011/65/CE

			MC 06	MC 16	MC 35
			MAH0006A24	MAH0016A24	MAH0035A24
Technical data					
In-line connection	max. wire section (mm²)		6	16	35
Shunted connection	Feed through wire	min. section (mm²)	1,5	2,5	6
		max. section (mm²)	6	10	25
	Shunted wire	min. section (mm²)	1,5	2,5	6
		max. section (mm²)	1,5	4	10
Size (mm)	A		13,2	13,6	19,2
	B		3,6	5,8	9,3
	C		13,8	14,2	19,8
	D		28	31	40
Screw, hexagonal key			No. 1,5	No. 2	No. 4
Weight (g)			7	10	34
Package (pcs)			10	10	5

Maximum number of terminals recommended to use inside of gel joints Break.

	MC 06	MC 16	MC 35
Break 25	1	1	-
Break 30	3	3	2
Break 50	5	5	2
Break 50Y	5	5	3
Break 100	5	5	5

Dimensions

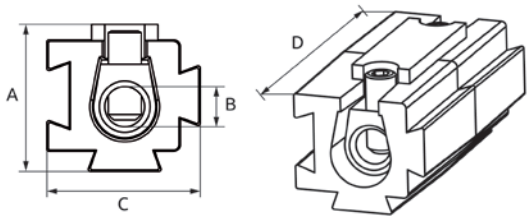

Distribution blocks SLT

1000 V AC/DC

Bimetal (AL/CU)

Class A

Certified according to standards EN 61238-1 and EN 60947-7-1

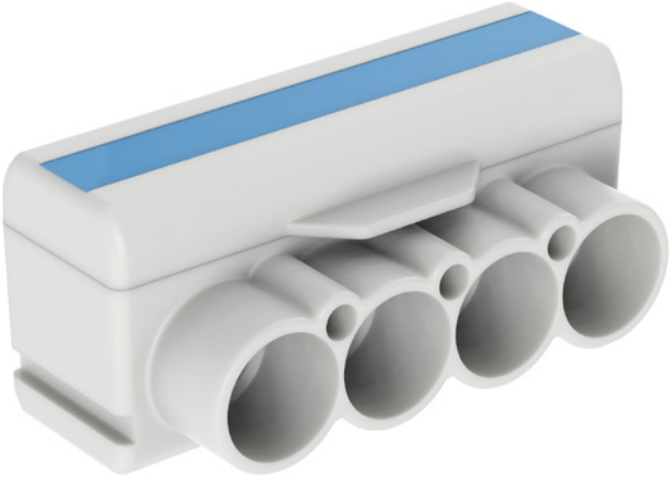

Distribution blocks SLT

Distribution blocks are designed for copper and aluminium conductors. The blocks are suitable for all types of copper or aluminium conductors with cross-section up to 50 mm² (Al) / 35 mm² (Cu). Multiple copper wires can be placed to the blocks according to the respective terminal type. IP protection class for blocks is IP23.
All blocks have 4 or 6 main terminals and two of them (SLT 50-4-3, SLT 50-6-3) additional connections (1) up to 2,5 mm² for connecting small cables, e.g. LED lights.

Distribution blocks are tested and certified class A connectors.

Distribution blocks are tested and certified by following standards:

*** EN 60947-7-1:2009, * EN 61238-1:2003**

Distribution blocks are used inside metal poles or in separate boxes. The items are soon available with DIN rails!

** Look more about standards on page 8.*

NEW

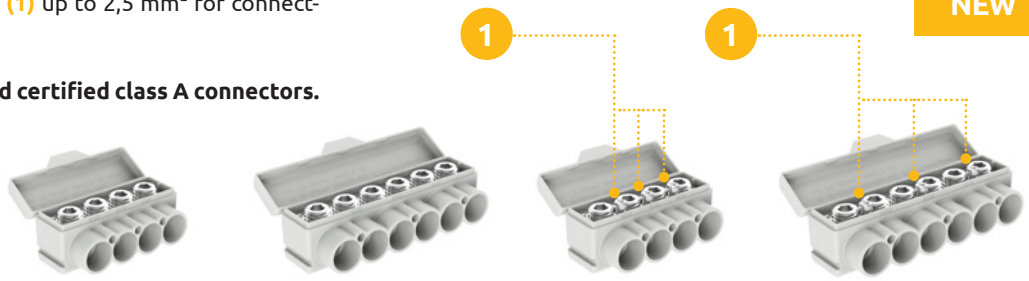

	SLT 50-4	SLT 50-6	SLT 50-4-3	SLT 50-6-3
Grey	MAS4050A10	MAS6050A10	MAS4051A10	MAS6051A10
Blue	MAS4050B10	MAS6050B10	MAS4051B10	MAS6051B10
Yellow-green	MAS4050Y10	MAS6050Y10	MAS4051Y10	MAS6051Y10
Technical data				
Conductor cross-section CU (mm²)	4 x (2,5 ÷ 35)	6 x (2,5 ÷ 35)	4 x (2,5 ÷ 35) + 3x 2,5	6 x (2,5 ÷ 35) + 3 x 2,5
Conductor cross-section AL (mm²)	4 x (10 ÷ 50)	6 x (10 ÷ 50)	4 x (10 ÷ 50)	6 x (10 ÷ 50)
Nominal voltage (V)	1000	1000	1000	1000
Nominal current CU / AL (A)	135 / 145	135 / 145	135 / 145	135 / 145
Width / Height / Length (mm)	60 / 17 / 29	86 / 27 / 29	60 / 17 / 29	86 / 27 / 29
Screw / hexagonal key (AV)	5	5	5	5
Tightening torque (Nm)	3 Nm (2,5-16 mm²) 8 Nm (25-50 mm²)	3 Nm (2,5-16 mm²) 8 Nm (25-50 mm²)	3 Nm (2,5-16 mm²) 8 Nm (25-50 mm²) 1Nm (2,5 mm² M4)	3 Nm (2,5-16 mm²) 8 Nm (25-50 mm²) 1Nm (2,5 mm² M4)
Weight (g)	41,8	61,1	46	70
Package (pcs)	18	6	18	6

Dimensions

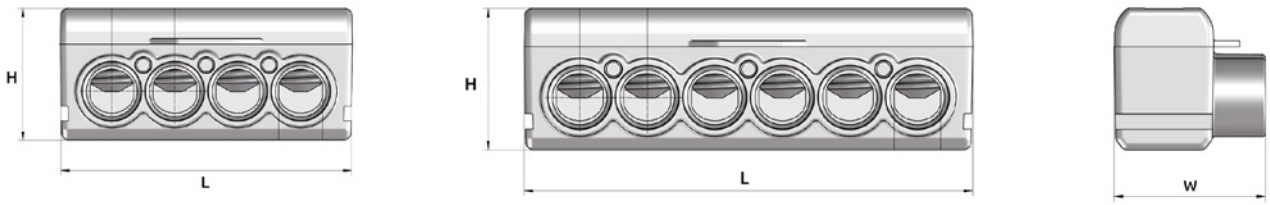

SLT DIN rail adapter

The SLT clamp holder is designed for DIN rail mounting longitudinally or transversally and is made with PA66 in grey.

Grey	MAS0001A10
Technical data	
Width / Height / Length (mm)	42,5 / 21 / 94
Weight (g)	17
Package (pcs)	100

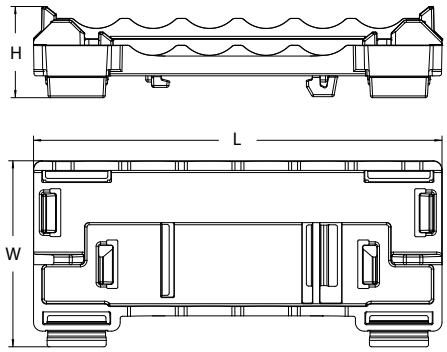

TPE (Thermoplastic Elastomer)

- Excellent resistance to weathering, ozone and UV exposure
- Provides good chemical resistance, and excellent electrical properties limited resistance for oils (resists oils as splash)
- Flame retardant grades UL 94 V-0 , halogen free
- Standard hardnesses 25 ShA – 70 ShA
- Recyclable
- Wide range of colors, easy to customize
- Service temperature range -40 to + 100 °C
- FDA approved grades available

TPU (Thermoplastic Urethane)

- Good resistance to weathering, ozone and UV exposure
- Good abrasive properties
- Limited resistance for oils (resists oils as splash)
- Standard hardnesses 50 ShA – 70 ShA
- Recyclable
- Wide range of colors, easy to customize
- Service temperature range -40 - + 100 °C
- FDA approved grades available

TPV (Thermoplastic Vulcanizate)

- Show excellent resistance to UV Light; very little change in Delta E
- Improved oil and chemical resistance; Exhibit superior chemical resistance over a wide range of temperature (Oils / Petroleum and Sebum, Automotive fluids, aqueous solutions, acids and bases, organic solvents).
- Flame retardant grades 50 ShA to 50 ShD , UL 94 V-0
- Hardness range 15 ShA to 50 ShD Temperature range continues use up to 125 °C and short-term exposure up to 150 °C. Brittle point lower than -60 °C for most grades. Provides good low-temperature flexibility and impact toughness.
- It looks and feels like thermoset rubber
- Improved compression set at elevated temperatures (over 70 °C)
- Medical/food contact grades from 45 ShA to 50 ShD

EPDM (Ethylene Propylene Diene Monomer)

- Superior resistance to weathering, ozone and UV exposure
- Provides excellent chemical resistance, and good electrical properties
- Resists animal and vegetable oils, steam, water and oxygenated solvents
- Flame retardant grades UL 94 V-2
- Standard hardnesses 40 ShA – 70 ShA
- Limited range of colors
- Working temperature range -40 to + 120 °C
- EMC grades with attenuation around 40 dB

NBR (Nitrile Butadiene Rubber)

- Limited weathering resistance
- It is generally resistant to fuel and other chemicals. Also resistant to aliphatic hydrocarbons but less resistant aromatic hydrocarbons, ketones, esters, aldehydes and to ozone
- Flame resistance is poor
- Hardness range 20 - 95 ShA
- Working temperature range of -40 to + 125 °C
- Environmental performances: colorability, gas permeability and water resistance are excellent
- Other physical & mechanical properties: adhesion to metal and rigid materials are excellent, abrasion resistance, compression set and tear resistance are good to excellent

CR (Chloroprene Rubber)

- Good weathering resistance, flame retarding. Moderate resistance to petroleum-based fluids
- Service temperature -45 to +120 °C
- Agdhesion to many substrates
- Good resistance toward chemicals and ageing
- CR in general has good chemical stability and maintains flexibility over a wide temperature range
- Hardness range 40 – 95 ShA

Q (Silicone)

- Excellent resistance to weathering, ozone and UV exposure
- Also provides excellent chemical resistance and good electrical properties
- Resists oils as splash
- Flame retardant grades UL 94 V-0
- Standard hardnesses 25 ShA – 90 ShA
- Wide range of colors, easy to customize
- Service temperature range -50 - + 200 °C

Table for IP codes

MOREK

First numeral

Protection against ingress of solid foreign objects

IP	Requirements	Example	Meaning protection of persons against access to hazardous parts with:
0	No protection		No protection provided
1	Full penetration of 50,0 mm diameter sphere not allowed and shall have adequate clearance from hazardous parts. Contact with hazardous parts not permitted		Back of hand
2	Full penetration of 12,5 mm diameter sphere not allowed. The jointed test finger shall have adequate clearance from hazardous parts	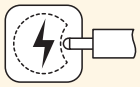	Finger
3	The access probe of 2,5 mm diameter shall not penetrate	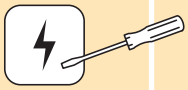	Tool
4	The access probe of 1,0 mm diameter shall not penetrate	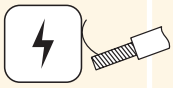	Wire
5	Limited ingress of dust permitted (no harmful deposit, refer to standard)	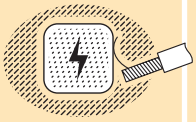	Wire
6	Totally protected against ingress of dust	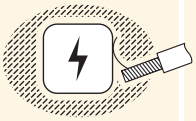	Wire

Second numeral

Protection against harmful ingress of water

IP	Requirements	Example	Meaning for protection from ingress of water:
0	No protection		No protection provided
1	Protected against vertically falling drops of water		Vertically dripping
2	Protected against vertically falling drops of water with enclosure tilted 15° from the vertical.		Enclosure tilted 15° from the vertical
3	Protected against sprays to 60° from the vertical		Limited spraying
4	Protected against water splashed from all directions		Splashing from all directions
5	Protected against low-pressure jets of water from all directions	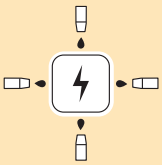	Hosing jets from all directions
6	Protected against strong jets of water	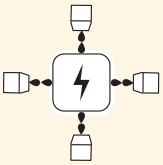	Strong hosing jets from all directions
7	Protected against the effects of immersion between 15,0 cm and 1,0 m	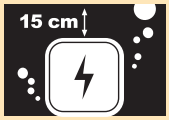	Temporary immersion
8	Protected against longer periods of immersion under pressure		Immersion

MOREK

Creating a better future for You

MOREK Finland

MOREK Estonia

MOREK Latvia

MOREK Lithuania

MOREK Poland

MOREK Czech Republic

MOREK Slovakia

www.morek.eu

11. 2019